OFFICE COPY

THIS IS A 2 PART FORM
WRITE ON A FIRM SURFACE

USE BLACK INK BALL POINT PEN — PRESS FIRMLY

SIGN PERMIT APPLICATION

33787
5-20790

SITE ADDRESS: Fac# 5561 1391 Florin RD. Sac, CA 95822 — SUITE: C2 — INSP. AREA: 2CS

ASSESSOR PARCEL NO.: 035-0352-014

PERMIT NO. 99055609

NAME OF APPLICANT	ADDRESS	ZIP CODE	PHONE NO.
LICENSED CONTRACTOR: Southern Light & Graphic	10370 Regis CT Rancho Cucamonga	91730	909-941-6667
BUSINESS OWNER: Acco Products Co.	4 Center Pointe Dr. 3rd Flr La Palma, CA	90623-1066	(714) 620-5300

CONSTRUCTION LENDING AGENCY

I hereby affirm under penalty of perjury that there is a construction lending agency for the performance of the work for which this permit is issued (Sec. 3097, Civ.C).

Lenders Name _____

Lenders Address _____

LICENSED CONTRACTORS DECLARATION

I hereby affirm under penalty of perjury that I am licensed under provisions of Chapter 9 (commencing with Section 7000) of Division 3 of the Business and Professions Code and my license is in full force and effect.

License Class B Lic. Number 732556

Date 15Sep99 Contractor To be determined

(Signature) Raymond Martinez

OWNER - BUILDER DECLARATION

I hereby affirm under penalty of perjury that I am exempt from the Contractor's License Law for the following reason (Sec. 7031.5, Business and Professions Code: Any city or county which requires a permit to construct, alter, improve, demolish, or repair any structure, prior to its issuance, also requires the applicant for such permit to file a signed statement that he or she is licensed pursuant to the provisions of the Contractors License Law (Chapter 9 (commencing with Section 7000) of Division 8 of the Business and Professions Code) or that he or she is exempt therefrom and the basis for the alleged exemption. Any violation of Section 7031.5 by any applicant for a permit subjects the applicant to a civil penalty of not more than five hundred dollars ($500.00):

☐ I, as owner of the property, or my employees with wages as their sole compensation, will do the work, and the structure is not intended or offered for sale (Sec. 7044, Business and Professions Code. The Contractors License Law does not apply to an owner of property who builds or improves thereon, and who does such work himself or herself or through his or her own employees, provided that such improvement is not intended or offered for sale. If, however, the building or improvement is sold within one year of completion, the owner-builder will have the burden of proving that he or she did not build or improve for the purpose of sale.)

☒ I am exempt under the provisions of Section 7044 of the Business and Professions Code, and I hereby affirm under penalty of perjury that I am exempt from the licensing requirements of Section 7000 et seq. of the Business and Professions Code, and I am not required to obtain a license from the Contractors State License Board because I will not be performing work for which a license is required pursuant to the provisions of Section 7000 et seq. of the Business and Professions Code, and I am not exempt from the requirement that I secure the payment of workers' compensation for my employees, and I am not exempt from the requirement that I secure a building permit to construct the project (Sec. 7044, Business and Professions Code. The Contractors License Law does not apply to an owner of property who builds or improves thereon, and who contracts for such projects with a contractor(s) licensed pursuant to the Contractors License Law.)

☐ I am exempt under Sec. _____ B & P C for this reason _____

Date 5/21/99 Owner _____ (Signature)

In issuing this building permit, the applicant represents, and the City relies on the representation of the applicant, that the applicant verified all measurements and locations shown on the application or accompanying drawings and that the improvement to be constructed does not violate any law or private agreement relating to permissible or prohibited location, for such improvement. This building permit does not authorize any illegal location of any improvement or the violation of any private restriction relating to the location of improvements.

I shall comply with all city and county ordinances and state laws relating to building construction and hereby authorize representatives of this city to enter upon the above mentioned property for inspection purposes.

5/24/99 Owner _____
Date Signature of Applicant or Agent

SIGN INFORMATION

☐ ATTACHED	☐ INTERIOR / ELECT.	☐ SINGLE FACED
☒ ILLUMINATED	☐ NON-ILLUMINATED	☐ BILLBOARD / SUBDIVISION
☐ INDIVIDUAL LETTERS	☐ PAINTED ON BUILDING	☐ LOGO
☐ METAL	☐ POLE	☐ DOUBLE FACED
☐ PLASTIC	☐ MONUMENT	☐ VINYL/GATOR FOAM
☐ WOODEN	☐ PROJECTING	☐ RE-FACE

(A) HEIGHT 4'-0" (B) LENGTH 7'-1 9/16"

(A X B) SIGN AREA 28.52

POLE SIZE _____ FOOTING SIZE _____

STREET FRONTAGE (FT) _____

OCCUPANCY FRONTAGE (FT) _____

SIGN COPY Remove and replace BLDG Sign and Fascia.

CITY OF SACRAMENTO
BUILDING INSPECTION DIVISION
PERMIT SERVICES 264-7619

WORKER'S COMPENSATION DECLARATION

I hereby affirm under penalty of perjury one of the following declarations:

☐ I have and will maintain a certificate of consent to self insure for workers' compensation as provided for by Section 3700 of the Labor Code, for the performance of work for which this permit is issued.

☐ I have and will maintain workers' compensation insurance, as required by Section 3700 of the Labor Code, for the performance of the work for which this permit is issued. My workers' compensation carrier and policy number are:

Carrier State Comp Fund Ins

Policy Number 459-98

☐ (This section need not be completed if the permit is for one hundred dollars ($100) or less.) I certify that in the performance of the work for which this permit is issued, I shall not employ any person in any manner so as to become subject to the workers' compensation laws of California, and agree that if I should become subject to the workers' compensation provisions of Section 3700 of the Labor Code, I shall forthwith comply with those provisions.

Date 15Sep99 Applicant Raymond Martinez (Signature)

FEE $
FEE
APP
NV
DEL
ATTORNEY

OFFICE USE ONLY

ENGINEERING REQUIRED? YES NO APPROVED BY ✓ T

DESIGN REVIEW REQUIRED? YES NO APPROVED BY _____

SPECIAL PERMIT REQUIRED? YES NO BY _____

VARIANCE REQUIRED? YES NO BY _____

LOCATED IN PUD YES NO WHICH PUD _____

SIGN VALUATION Attach illu

~~TOTAL $8,000~~

FEES PER SQ. FT. _____ SQ. FT. _____

APPROVED BY WT DATE _____

FINAL INSPECTIONS

BUILDING INSPECTOR _____ DATE 7-25-00

ELECTRICAL INSPECTOR _____ DATE 7-24-00

SIGN INSPECTOR _____ DATE _____

FEES RECEIVED

	DATE	AMOUNT
SIGN APPLICATION FEE		
SIGN PERMIT FEE	9905609S	
ELECTRICAL SIGN FEE		
CHECK ACCEPTED		
OTHER		

TOTAL FEES $

THIS PERMIT SHALL EXPIRE BY LIMITATION IF WORK AUTHORIZED IS NOT COMMENCED WITHIN 180 DAYS.

THIS IS A 2 PART FORM
WRITE ON A FIRM SURFACE

USE BLACK INK BALL POINT PEN — PRESS FIRMLY

SIGN PERMIT APPLICATION

337 E1
5-20-791

SITE ADDRESS	SUITE	INSP. AREA
Fac # 5561 1391 Florin RD. Sac, CA 95822	C2	ZCS

ASSESSOR PARCEL NO. 035-0352-014

PERMIT NO. 9905615

NAME OF APPLICANT	ADDRESS	ZIP CODE	PHONE NO.
LICENSED CONTRACTOR			
BUSINESS OWNER Arco Products Co.	4 center Pointe Dr. 3rd FL LA Palma, CA	90623-1066	(714) 620-5300

CONSTRUCTION LENDING AGENCY

I hereby affirm under penalty of perjury that there is a construction lending agency for the performance of the work for which this permit is issued (Sec. 3097, Civ.C).

Lenders Name _____

Lenders Address _____

LICENSED CONTRACTORS DECLARATION

I hereby affirm under penalty of perjury that I am licensed under provisions of Chapter 9 (commencing with Section 7000) of Division 3 of the Business and Professions Code and my license is in full force and effect.

License Class _____ Lic. Number _____

Date _____ Contractor To be determined.
(Signature)

OWNER - BUILDER DECLARATION

I hereby affirm under penalty of perjury that I am exempt from the Contractors License Law for the following reason (Sec. 7031.5, Business and Professions Code: Any city or county which requires a permit to construct, alter, improve, demolish, or repair any structure, prior to its issuance, also requires the applicant for such permit to file a signed statement that he or she is licensed pursuant to the provisions of the Contractors License Law (Chapter 9 (commencing with Section 7000) of Division 8 of the Business and Professions Code) or that he or she is exempt therefrom and the basis for the alleged exemption. Any violation of Section 7031.5 by any applicant for a permit subjects the applicant to a civil penalty of not more than five hundred dollars ($500.00)

☐ I, as owner of the property, or my employees with wages as their sole compensation, will do the work, and the structure is not intended or offered for sale (Sec. 7044, Business and Professions Code: The Contractors License Law does not apply to an owner of property who builds or improves thereon, and who does such work himself or herself or through his or her own employees, provided that such improvements are not intended or offered for sale. If, however, the building or improvement is sold within one year of completion, the owner-builder will have the burden of proving that he or she did not build or improve for the purpose of sale.)

☒ I as owner of the property, or my employees with wages as their sole compensation, will do the work, and the structure is not intended or offered for sale (Sec. 7044, Business and Professions Code: The Contractors License Law does not apply to an owner of property who builds or improves thereon, and who contracts for such projects with a contractor(s) licensed pursuant to the Contractors License Law.)

☐ I am exempt under Sec. _____ B & P.C. for this reason _____

Date 5/21/99 Tom Page
(Signature)

I hereby affirm under penalty of perjury that I am the owner of the property or my agent in issuing this building permit, the applicant represents and the City relies on the representation of the applicant, that the applicant verified all measurements and locations shown on the application or accompanying drawings and that the improvement to be constructed does not violate any law or private agreement relating to permissible or prohibited locations for such improvements. This building permit does not authorize any illegal location of any improvement so in violation of any private agreement or covenant.

I hereby affirm under penalty of perjury that I am familiar with the California Building Code and I agree to comply with all city and county ordinances and state laws relating to building construction, and hereby authorize representatives of this city to enter upon the above mentioned property for inspection purposes.

5/24/99 Tom Page
Date Signature of Applicant or Agent

SIGN INFORMATION

☐ ATTACHED	☐ INTERIOR / ELECT.	☐ SINGLE FACED
☒ ILLUMINATED	☐ NON-ILLUMINATED	☐ BILLBOARD / SUBDIVISION
☐ INDIVIDUAL LETTERS	☐ PAINTED ON BUILDING	☐ LOGO
☐ METAL	☐ POLE	☐ DOUBLE FACED
☐ PLASTIC	☐ MONUMENT	☐ VINYL/GATOR FOAM
☐ WOODEN	☐ PROJECTING	☐ RE-FACE

(A) HEIGHT 4'-0" (B) LENGTH 7'-1 4/16"

(A X B) SIGN AREA 28.52.

POLE SIZE _____ FOOTING SIZE _____

STREET FRONTAGE (FT) _____

OCCUPANCY FRONTAGE (FT) _____

SIGN COPY Remove and Replace BLDG Sign and Fascia

CITY OF SACRAMENTO
BUILDING INSPECTION DIVISION
PERMIT SERVICES 264-7619

OFFICE USE ONLY

ENGINEERING REQUIRED? YES (NO) APPROVED BY JT

DESIGN REVIEW REQUIRED? YES (NO) APPROVED BY _____

SPECIAL PERMIT REQUIRED? YES (NO) P# _____

VARIANCE REQUIRED? YES (NO) P# _____

LOCATED IN PUD? YES NO WHICH PUD? _____

SIGN VALUATION

TYPE OF SIGN Attach illu

W x H _____ PER SQ. FT. $ _____ SQ. FT. $ _____

APPROVED BY NA DATE _____

WORKER'S COMPENSATION DECLARATION

I hereby affirm under penalty of perjury one of the following declarations:

☐ I have and will maintain a certificate of consent to self insure for workers' compensation, as provided for by Section 3700 of the Labor Code, for the performance of work for which this permit is issued.

☐ I have and will maintain workers' compensation insurance, as required by Section 3700 of the Labor Code, for the performance of the work for which this permit is issued. My workers' compensation insurance carrier and policy number are:

Carrier _____

Policy Number _____

☐ (This section need not be completed if the permit is for one hundred dollars ($100) or less.) I certify that, in the performance of the work for which this permit is issued, I shall not employ any person in any manner so as to become subject to the workers' compensation laws of California, and agree that, if I should become subject to the workers' compensation provisions of Section 3700 of the Labor Code, I shall forthwith comply with those provisions.

Date _____ Signature _____

FINAL INSPECTIONS

BUILDING INSPECTOR _____ DATE _____

ELECTRICAL INSPECTOR LJR DATE 7-22-00

SIGN INSPECTOR _____ DATE _____

FEES	RECEIVED DATE	RECEIVED AMOUNT
SIGN APPLICATION FEE	Paid	25.00
SIGN PERMIT FEE		
ELECTRICAL SIGN FEE	9905615S	
PLAN REVIEW FEE		
OTHER		

TOTAL FEES $

THIS PERMIT SHALL EXPIRE BY LIMITATION IF WORK AUTHORIZED IS NOT COMMENCED WITHIN 180 DAYS

PLOT PLAN

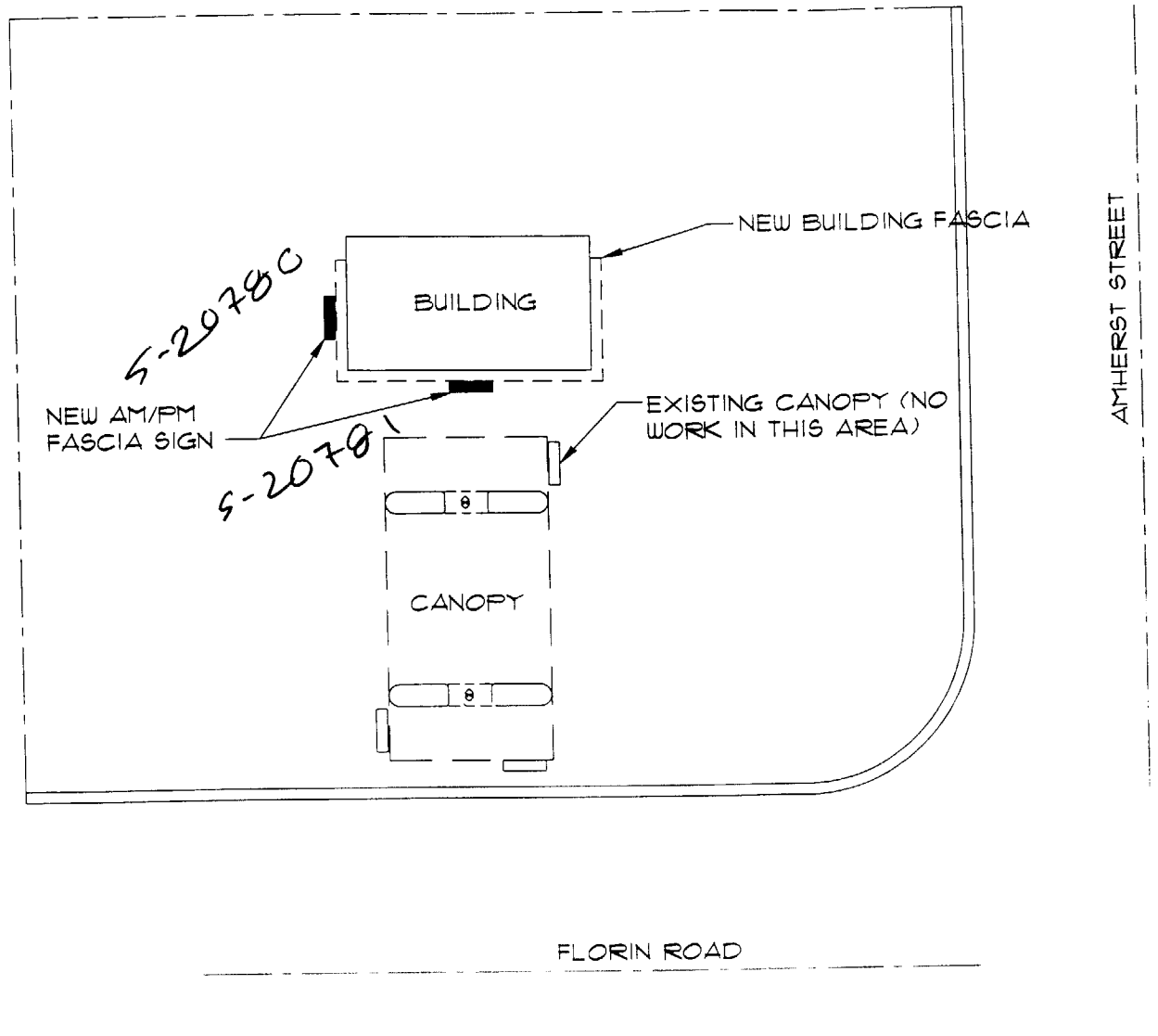

VICINITY MAP

APPROVED PER 1993
NATIONAL ELECTRICAL CODE
AND CITY OF SACRAMENTO
AMENDMENTS:
6-2-99
ELECTRICAL DIVISION

Provide disconnect @ Signs

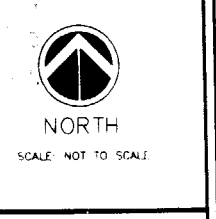

PROJECT NOTES

PROJECT DESCRIPTION

OWNER:	ARCO PRODUCTS COMPANY	FAC.551
APN #		
ADDRESS	1391 Florin Rd	
CITY, STATE	Sacramento, CA 95822	
CROSS STREETS	Amhurst St.	
BUILDING AREA	1102 SQ. FT	
OCCUPANCY	M	
PROJECT USE	CONVENIENCE STORE	
BLDG. CODE 1994 UBC		

REGISTERED PROFESSIONAL ENGINEER
STANLEY R. IVERSON
No. 044785
EXP. 3-31-2002
CIVIL
STATE OF CALIFORNIA

FINAL REVIEW	INITIAL	DATE
PRELIMINARY		
PLANNING		
STEEL BID		
BLDG PERMIT		
GENERAL BID		
PERMIT REV'S		
CONSTRUCTION Do not use drawing for construction unless initialed		

FILE COPY

ARCO Products Company
Division of AtlanticRichfieldCompany
Retail Marketing . Design & Engineering
4 Centerpointe Drive, 3rd Floor
La Palma, CA 90623-1066 (714) 670-5900

TAIT & ASSOCIATES, INC.
7300 SUNRISE BLVD. SUITE 205
RANCHO CORDOVA, CALIFORNIA 95742
TEL (916) 635-2448
FAX (916) 635-2466

Reimaging Exist. Building
1391 Florin Rd.
Sacramento, CA. 95822
Title Sheet

appr
TAIT 08# 1167

date 01/07/98 drawn by DB

project / facility 551

sheet / file 1 of 3

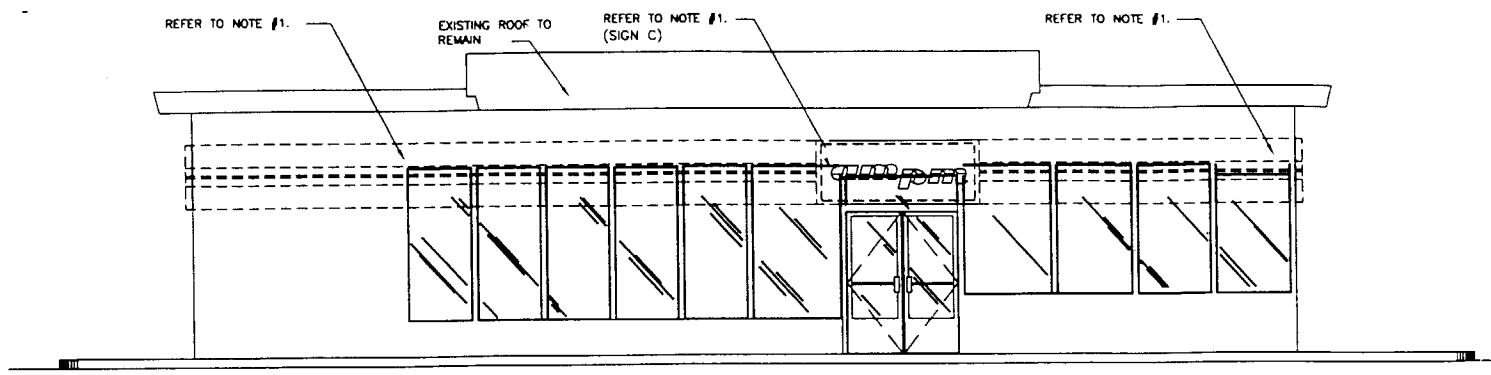

EXISTING FRONT ELEVATION

SCALE 1/4" = 1'-0"

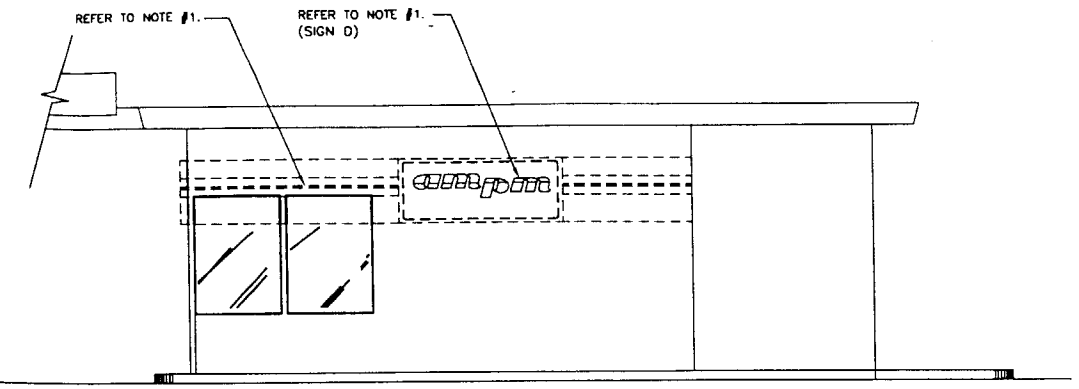

EXISTING SIDE ELEVATION

SCALE 1/4" = 1'-0"

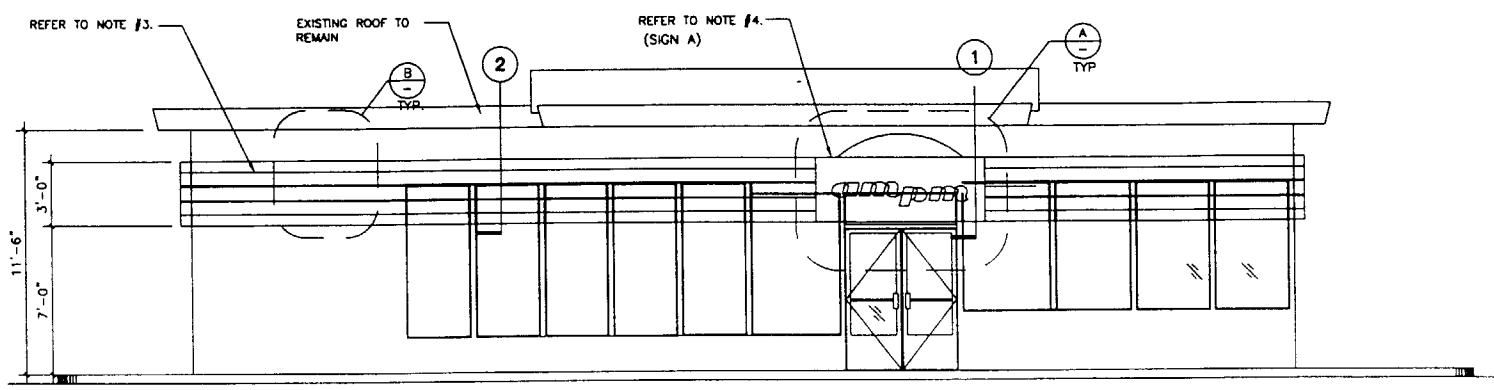

PROPOSED FRONT ELEVATION

SCALE 1/4" = 1'-0"

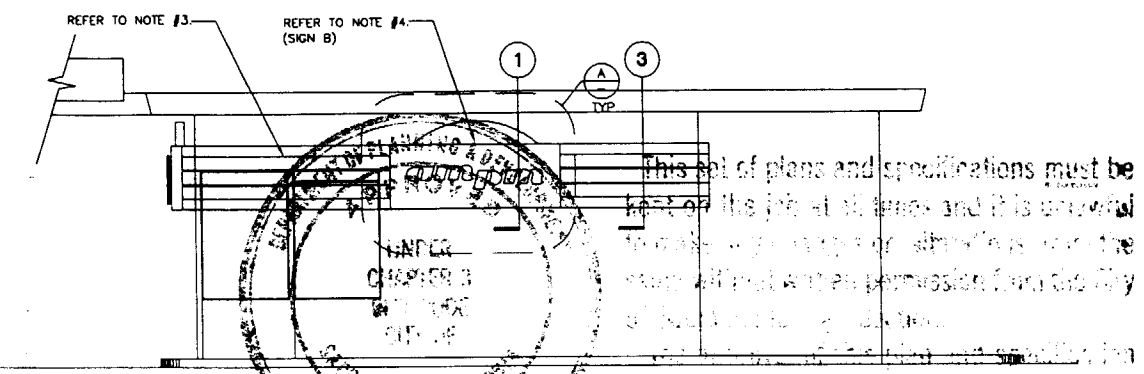

PROPOSED SIDE ELEVATION

SCALE 1/4" = 1'-0"

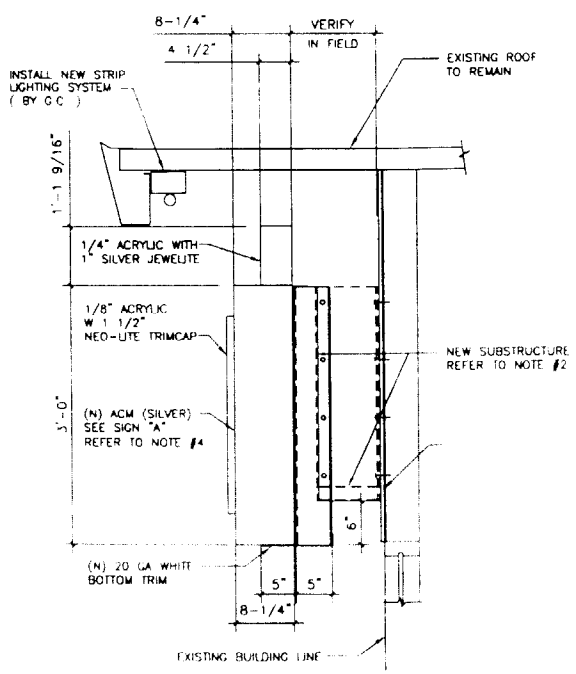

SECTION • NEW SIGN

(1) SCALE 1"=1' 0"

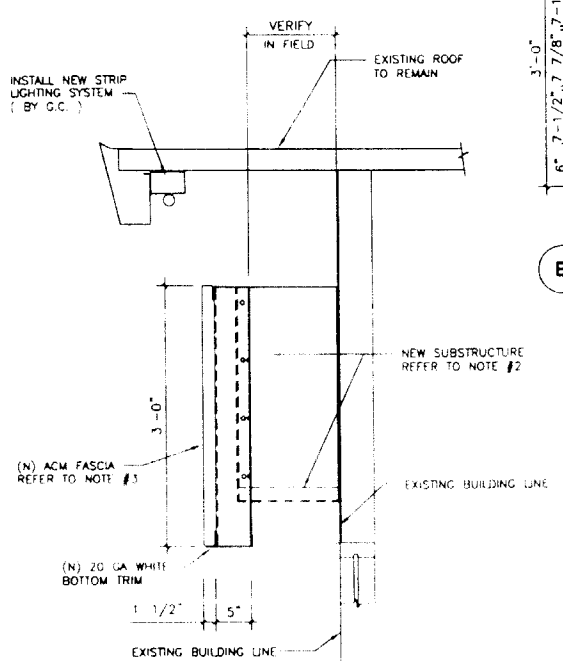

SECTION • ACM FASCIA

(2) SCALE 1"=1' 0"

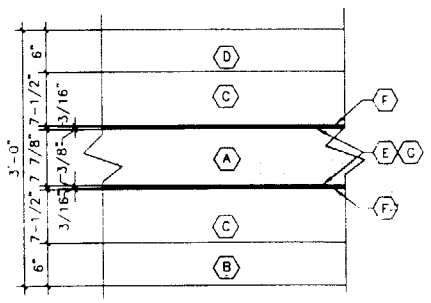

ELEVATION • FASCIA

(B) SCALE 1"=1'-0"

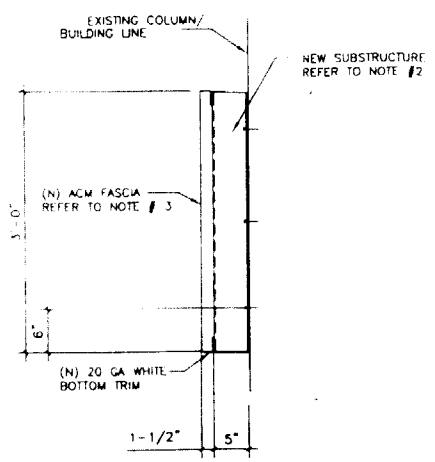

SECTION • ACM FASCIA

(3) SCALE 1"=1'-0"

PAINT + COLOR SPECIFICATIONS

- (A) STANDARD SILVER METALLIC BY RJ REYNOLDS-PMS 877 C
- (B) ARCO BLUE - (3M VSQ 7550) PMS BLUE 072 C
- (C) ARCO RED - (3M VSQ 7623) PMS RED 032 C
- (D) ARCO ORANGE - (3M VSQ [illegible]) PMS [illegible] C
- (E) 3M GRAY METALLIC 3650-221
- (F) 3M PEARL GRAY 7725-11
- (G) ARCO SILVER - (3M VSQ 7551) PMS 877 C w/O BLOCKOUT ADHESIVE

SCOPE OF WORK

1. REMOVE EXISTING FASCIA GRAPHICS AND 'ampm' SIGN GRAPHICS FROM EXISTING SIGN BOX OR BACKING. (TYPICAL ALL SIDES) REUSE EXISTING SUBSTRUCTURE OR DISCARD AS DIRECTED BY THE ARCO FIELD ENGINEER. SEE PLAN, ELEVATION AND ATTACHED DETAILS.
2. REUSE EXISTING SUBSTRUCTURE OR AS DIRECTED BY THE ARCO FIELD ENGINEER AND SUBMIT SEE PLANS AND ATTACHED DETAILS.
3. INSTALL NEW ACM FASCIA. ATTACH NEW ACM FASCIA MATERIAL TO SUBSTRUCTURE AS NOTED ON PLANS AND PER ATTACHED DETAILS.
4. INSTALL NEW INTERNALLY ILLUMINATED 'ampm' BUILDING SIGN. SIGN CAN BACK PANEL (0.090 ALUMINUM) SHALL BE ATTACHED TO SUBSTRUCTURE AS NOTED ON PLANS.

SIGN AREA CALCULATIONS

SIGN	QUANTITY	ILLUMINATED	AREA/SIGN	TOTAL AREA
SIGN A - FRONT SIGN	+ 1	YES	26.62 S.F.	+ 26.62 S.F.
SIGN B - SIDE SIGN	+ 1	YES	26.62 S.F	+ 26.62 S.F.
SIGN C - FRONT SIGN	- 1	YES	24.0 S.F	- 24.0 S.F
SIGN D - SIDE SIGN	- 1	YES	24.0 S.F	- 24.0 S.F
TOTAL CHANGE IN SIGNAGE				+ 5.24 S.F

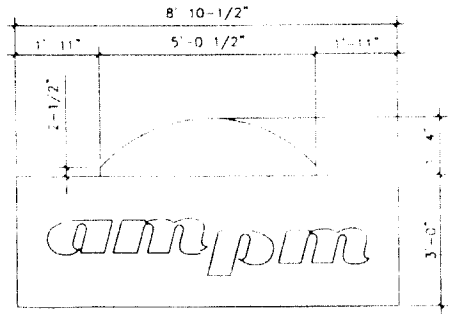

NEW SIGN "A" 26.62 S.F.

(A) SCALE 1/2"=1'-0"

NOTE

SCALE NOTED IS FOR 24" X 36" DRAWING

NO.	DATE	REVISIONS
	04.01.99	UPDATE

PROJECT RELEASE
ISSUED FOR PLAN CHECK
BID RELEASE
CONST. RELEASE
AS-BUILT

This set of plans and specifications must be kept on the job at all times and it is unlawful to make changes or alterations on the same without permission from the Architect.

ARCO Products Company
Division of AtlanticRichfieldCompany
Retail MarketingDesign and Engineering
4 Centerpointe Drive
La Palma, CA 90623-1066 (714) 670-5300

Reimaging Exist. Bldg. Fascia

Flat Building
Building Elevations
©Atlantic Richfield Company 1997

REGISTERED PROFESSIONAL ENGINEER
STANLEY H. IVERSON
No. 044785
EXP. 3-31-2002
CIVIL
STATE OF CALIFORNIA

Tail Job No

proj exe 02.18.99
drawn by RE/AH
project / facility

sheet / file
2
of

TYPE-5

G:\clients\arco\Ar929\standard\UNDRELEV.DWG

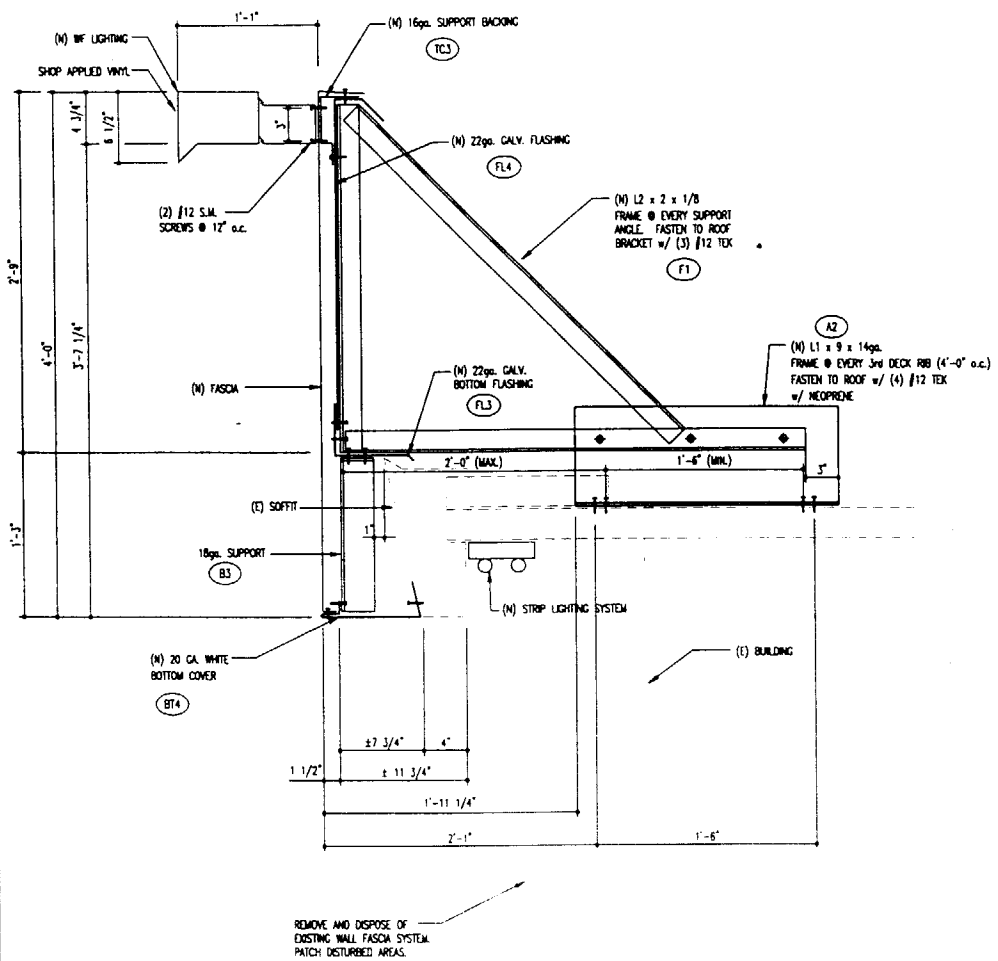

SECTION A

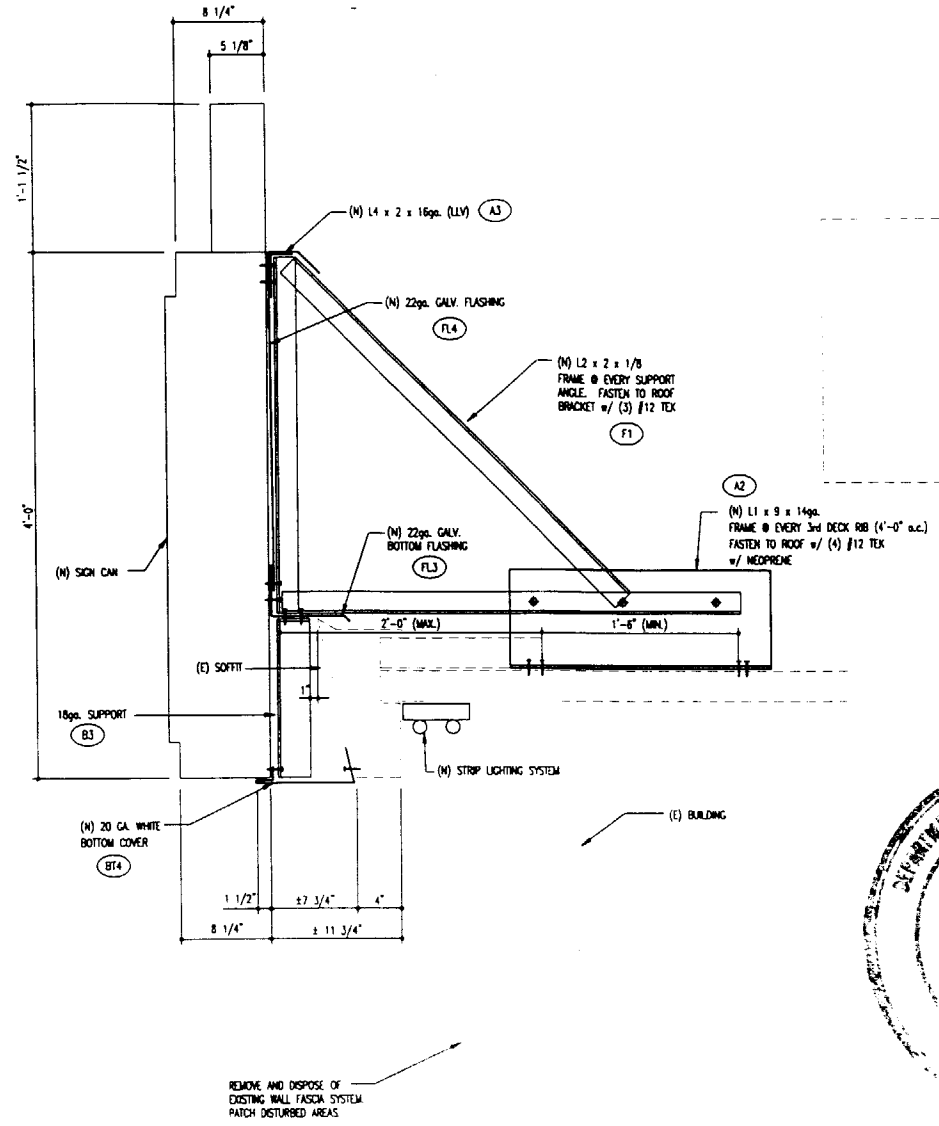

SECTION B

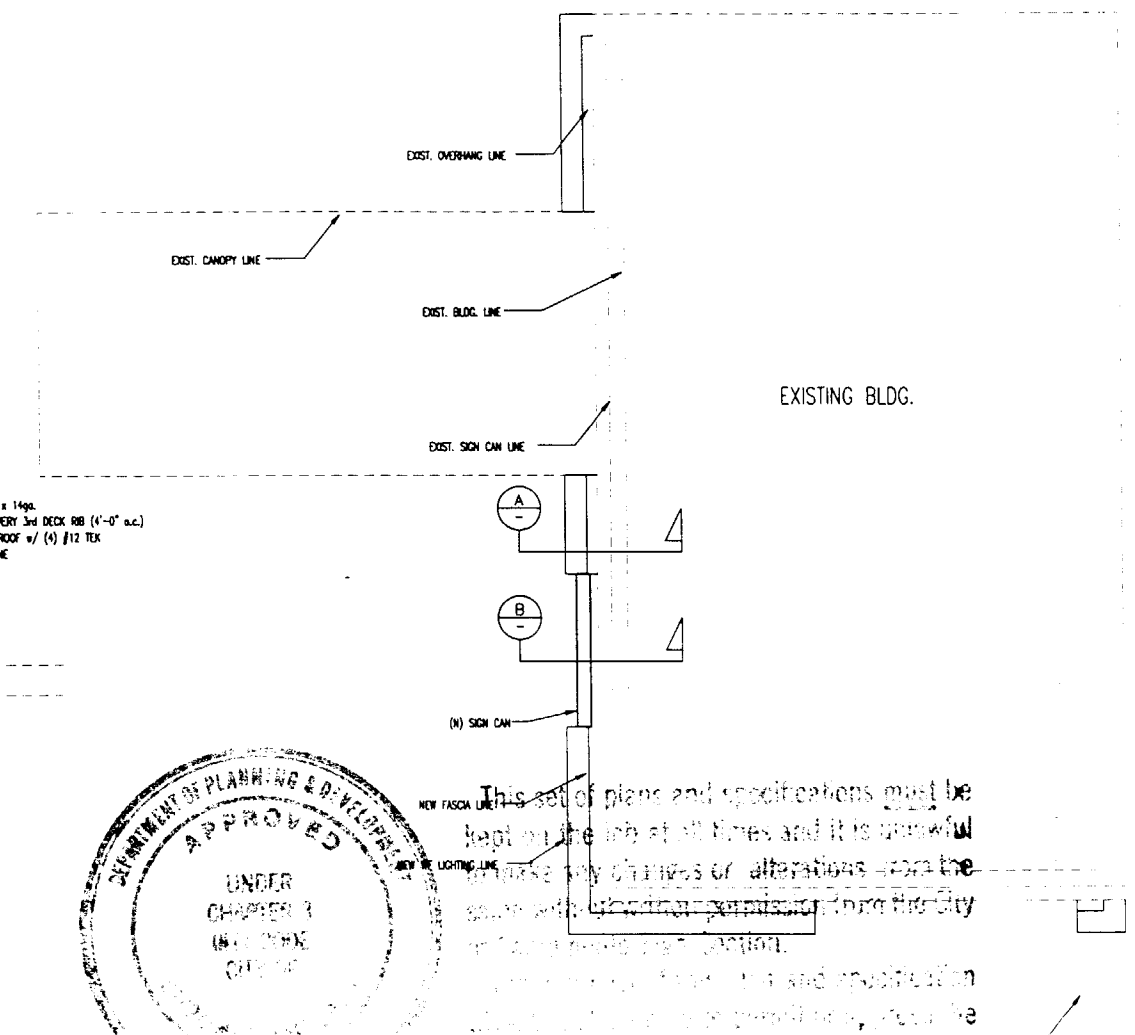

LAYOUT PLAN

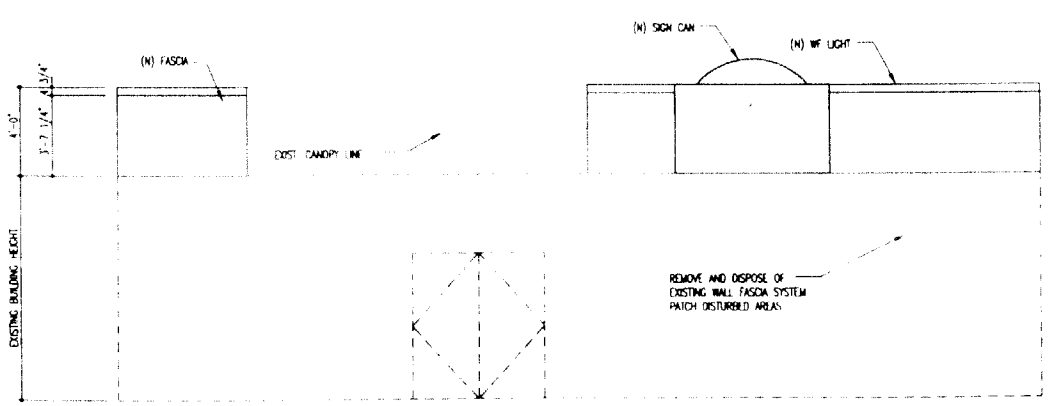

FRONT ELEVATION

NOTE :

SCREWS = #12 S.M. (TEKS) @ 24" o.c. MAX SPACING UNLESS NOTED OTHERWISE

DEPARTMENT OF PLANNING & DEVELOPMENT
APPROVED
UNDER
CHAPTER 3
(UBC) OF THE
CODE

This set of plans and specifications must be kept on the job at all times and it is unlawful to make any changes or alterations upon the same without obtaining permission from the City of [illegible] Section.

[illegible] and construction [illegible] e [illegible]

Auxiliary [illegible] shall comply with chapter 14, standards, U.B.C. 3-90 [illegible] canopy with chapter 14, Div. 2 of Santa Monica City Code.

EQUIPMENT MUST BE USED AS DESIGN INTENDED

ALL SIGN INSTALLATIONS ARE SUBJECT TO FIELD INSPECTIONS

REGISTERED PROFESSIONAL ENGINEER
STANLEY P. IVERSON
No. 044785
EXP. 3-31-2002
CIVIL
STATE OF CALIFORNIA

DEMO (D)
EXISTING (E)
NEW (N)

ARCO Products Company
Division of Atlantic Richfield Company

BUILDING w/ ATTACHED CANOPY
FLAT TOP (ABOVE EAVE)
LAYOUT and SECTION

JOB LOCATION -
S/O-W/O -

SCALE:	1 1/2" =1'-0"
DRWN. BY:	J.V.
DATE :	12/17/98
DETAIL BY:	
DATE :	

PART No. - (-)
DRWG. No. FA1
HAND SHOWN
REV. -
FILE No. SEE MARGIN
SHEET -
OF -

MARK	DATE	REVISION	BY	APV'D.

TYPE-5