CITY OF SACRAMENTO
1231 I Street, Sacramento, CA 95814

Permit No: 0104067
Insp Area: 4

Site Address: 5211 FREDERICKSBURG WY SAC
Parcel No: 201-0390-049

Sub-Type: ASFR
Housing (Y/N): N

CONTRACTOR
PIDWERBECKI RENOVATIONS
2342 PINTURO WY
RANCHO CORDOVA CA 95670

OWNER
WHITSETT
5211 FREDERICKSBURG WY
SAC CA

ARCHITECT

Nature of Work: 424 SQ FT SHADED PATIO COVER

CONSTRUCTION LENDING AGENCY : I hereby affirm under penalty of perjury that there is a construction lending agency for the performance of the work for which this permit is issued (Sec. 3097, Civ. C)

Lender's Name_____ Lender's Address_____

LICENSED CONTRACTORS DECLARATION: I hereby affirm under penalty of perjury that I am licensed under provisions of Chapter 9 (commencing with section 7000) of Division 3 of the Business and Professions Code and my license is in full force and effect.

X License Class B License Number 775348 Date 4/3/01 Contractor Signature Michael Pidwerbecki

OWNER-BUILDER DECLARATION: I hereby affirm under penalty of perjury that I am exempt from the contractors License Law for the following reason (Sec. 7031.5, Business and Professions Code, any city or county which requires a permit to construct, alter, improve, demolish, or repair any structure, prior to its issuance, also requires the applicant for such permit to file a signed statement that he or she is licensed pursuant to the provisions of the Contractors License Law (Chapter 9 (commencing with Section 7000) of Division 8 of the Business and Professions Code) or that he or she is exempt therefrom and the basis for the alleged exemption. Any violation of Section 7031.5 by any applicant for a permit subjects the applicant to a civil penalty of not more than five hundred dollars ($500.00)

____ I, as a owner of the property, or my employees with wages as their sole compensation, will do the work, and the structure is not intended or offered for sale (Sec. 7044, Business and Professional Code: The Contractors License Law does not apply to an owner of property who builds or improves thereon, and who does such work himself or herself or through his/her own employees, provided that such improvements are not intended or offered for sale. If, however, the building or improvement is sold within one year of completion, the owner-builder will have the burden of proving that he/she did not build or improve for the purpose of sale.)

____ I, as owner of the property, am exclusively contracting with licensed contractors to construct the project (Sec. 7044, Business and Professions Code: The Contractors License Law does not apply to an owner of property who builds or improves thereon, and who contracts for such projects with a contractor(s) licensed pursuant to the Contractors License Law.)

____ I am exempt under Sec. ____ B & PC for this reason: _____

Date_____ Owner Signature _____

IN ISSUING THIS BUILDING PERMIT, the applicant represents, and the city relies on the representation of the applicant, that the applicant verified all measurements and locations shown on the application or accompanying drawings and that the improvement to be constructed does not violate any law or private agreement relating to permissible or prohibited locations for such improvements. This building permit does not authorize any illegal location of any improvement or the violation of any private agreement relating to location of improvements.

I certify that I have read this application and state that all information is correct. I agree to comply with all city and county ordinances and state laws relating to building construction and herby authorize representative(s) of this city to enter upon the abovementioned property for inspection purposes.

X Date 4/3/01 Applicant/Agent Signature Michael Pidwerbecki

WORKER'S COMPENSATION DECLARATION: I hereby affirm under penalty of perjury one of the following declarations:

____ I have and will maintain a certificate of consent to self-insure for workers' compensation as provided for by Section 3700 of the Labor Code, for the performance of work for which the permit is issued.

X I have and will maintain workers' compensation insurance, as required by Section 3700 of the Labor Code, for the performance of the work for which this permit is issued. My workers' compensation insurance carrier and policy number are:

Carrier EXEMPT Policy Number Exp Date

____ (This section need not be completed if the permit is for $100 or less) I certify that in the performance of the work for which this permit is issued, I shall not employ any person in any manner so as to become subject to the workers' compensation laws of California and agree that if I should become subject to the workers' compensation provisions of Section 3700 of the Labor Code, I shall forthwith comply with those provisions.

X Date 4/3/01 Applicant Signature Michael Pidwerbecki

WARNING: FAILURE TO SECURE WORKER'S COMPENSATION COVERAGE IS UNLAWFUL AND SHALL SUBJECT AN EMPLOYER TO CRIMINAL PENALTIES AND CIVIL FINES UP TO ONE HUNDRED THOUSAND DOLLARS ($100,000) IN ADDITION TO THE COST OF COMPENSATION, DAMAGES AS PROVIDED FOR IN SECTION 3706 OF THE LABOR CODE, INTEREST AND ATTORNEY'S FEE.

THIS PERMIT SHALL EXPIRE BY LIMITATION IF WORK IS NOT COMMENCED WITHIN 180 DAYS.

Date of Request: 4/3/01
By: MICHAEL PIDWERECKI

CITY OF SACRAMENTO DEVELOPMENT SERVICES DIVISION
PLANNING AND ZONING INFORMATION REQUEST

X Project Address: [illegible]

Assessor's Parcel Number: [illegible]-049

Previous Use

X Description of Request/Proposed Use: ATTACHED PATIO COVER 26'6" x 16'-[illegible] [illegible] WET SET ON NEW PADS [illegible] INSTALLED BY [illegible] LANDSCAPE

Is This a Change of Use?

Zoning Designation: R1-PUD

Prior Applications for Project Site(P#, Z#, DRPB#): P95-085

Comments [illegible] under 40% vs. 50 the additional [illegible] coverage. Rear set back to be 15 ft [illegible] including max. 2 ft overhang.

Are There Any Planning Issues?: (circle one) YES (NO)

* ~~Staff Site Plan Check Required? (Circle one) YES NO~~
* ~~Field Inspection Required? (Circle one) YES NO~~
* Design Review/Preservation Required?: (Circle one) YES (NO)

Planning Review by/Date: [illegible] 4-3-01

A list of items that must be reviewed by Planning is provided on the reverse side of this form.

MICROFILM AFTER FINAL

Revised 3/31/99

CBSQ POST BASES

The CBSQ uses Simpson's SDS screws, which allows for fast installation, reduced reveal and high capacity, while maintaining the net section of the post.
MATERIAL: See table. **FINISH**: Galvanized
INSTALLATION: • Use all specified fasteners. See General Notes.
• Not recommended for non-top-supported installations such as fences.
CODES: Submitted to ICBO 10/99.

Model No.	Nominal Post Size	Material		Dimensions				Number of Simpson SDS¼ x 2" Screws	Uplift Avg Ult	Allowable Loads		
		Base (Ga)	Strap (Ga)	W_1	W_2	D	H			Uplift (133)	Uplift (160)	Down (100)
CBSQ44-SDS2	4x4	12	10ga x 2¼	3 9/16	3½	7 1/16	8⅜	14	16667	5335	5335	10975
CBSQ44-SDS2	4x6	12	10ga x 3	3 9/16	3 9/16	7¾	8 11/16	14	16667	5335	5335	14420
CBSQ44-SDS2	6x6	12	10ga x 3	5½	5½	6⅞	8¾	14	24000	5710	6855	14420

[1] For higher downloads, solidly pack grout under 1" standoff plate before installing CBSQ into concrete. Base download on post or concrete, according to the code.

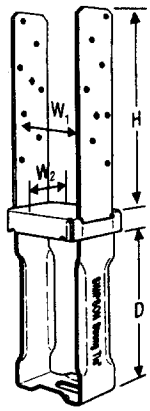

CBSQ-SDS2

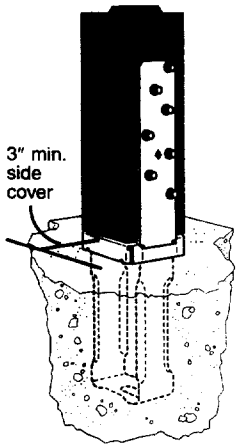

Typical CBSQ-SDS2 Installation

CBQ COLUMN BASES

The CBQ uses Simpson's SDS screws, which allows for fast installation, reduced reveal and high capacity, while maintaining the net section of the post.
MATERIAL: See table. **FINISH**: Galvanized.
INSTALLATION: • Use all specified fasteners. See General Notes.
• Not recommended for non-top-supported installations such as fences.
CODES: Submitted to ICBO 10/99.

Model No.	Nominal Post Size	Material		Dimensions				Number of Simpson SDS¼ x 2" Screws	Uplift Avg Ult	Allowable Loads	
		Base (Ga)	Strap (Ga)	W_1	W_2	D	H			Uplift (133)	Uplift (160)
CBQ44-SDS2	4x4	7	7ga x 2	3 9/16	3 9/16	8	8 11/16	12	14350	4200	4200
CBQ44-SDS2	4x6	7	7ga x 2	3 9/16	5½	8	8 11/16	12	14350	4200	4200
CBQ44-SDS2	6x6	7	7ga x 2	5½	5½	8	8 11/16	12	14350	4200	4200

CBQ and CBSQ

To order with screws, specify CBQ-SDS2 or CBSQ-SDS2.

To order without screws, specify CBQ or CBSQ.

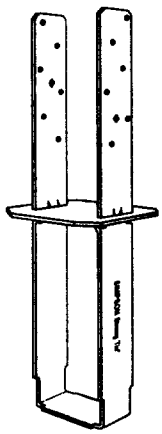
CBQ-SDS2

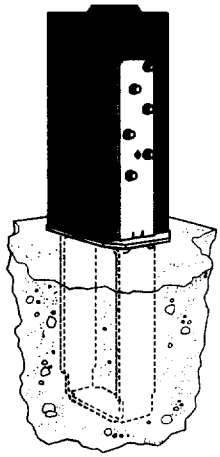
Typical CBQ-SDS2 Installation

LCB/CB COLUMN BASES

LCB—Low-cost post base for patios, carports, breezeways and porches.
CB—For columns that require high structural values and rugged performance.
FINISH: LCB, CB44, CB46, CB66—galvanized; CB-Simpson gray paint or HDG.
INSTALLATION: • Use all specified fasteners. See General Notes.
• For full loads, minimum side cover required is 3" for CB, 2" for LCB.
• Install all models with bottom of base plate flush with concrete.
• Not recommended for non-top-supported installations such as fences.
OPTIONS: • The LCB may be shipped unassembled; specify "Disassembled".
• LCB and CB are available in rough size. Other sizes available for CB specify W1 and W2 dimensions. Consult Simpson for bolt sizes and allowable loads. See PBS.
CODES: BOCA, ICBO, SBCCI NER-393; City of L.A. RR 24818.

Model No.	Nominal Post Size	Material		Dimensions			Post Fasteners			Uplift average Ult	Allowable Uplift Loads			
		Strap	Base (Ga)	W_1	W_2	D	Nails	Bolts			Nails		Bolts	
								Qty	Dia		(133)	(160)	(133)	(160)
LCB44	4x4	12 ga x2	16	3 9/16	3½	6½	12-16d	2	½	17853	2255	2705	3545	4250
CB44	4x4	7 ga x2	7	3 9/16	3 9/16	8	—	2	⅝	14350	—	—	4200	4200
LCB46	4x6	12 ga x2	16	3 9/16	5½	6½	12-16d	2	½	17853	2255	2705	3530	4240
CB46	4x6	7 ga x2	7	3 9/16	5½	8	—	2	⅝	14350	—	—	4200	4200
CB48	4x8	7 ga x2	7	3 9/16	7½	8	—	2	⅝	14350	—	—	4200	4200
CB5	GLULAM	7 ga x3	7	5¼	SPEC	8	—	2	⅝	14350	—	—	4200	4200
LCB66	6x6	12 ga x2	16	5½	5½	5½	12-16d	2	½	17853	2255	2705	3525	4230
CB66	6x6	7 ga x3	7	5½	5½	8	—	2	⅝	14350	—	—	4200	4200
CB6-7	6x	7 ga x3	7	5½	7	8	—	2	⅝	14350	—	—	4200	4200
CB7⅛-4	PSL	3 ga x3	7	7⅛	3½	8	—	2	¾	20650	—	—	6650	6650
CB7⅛-6	PSL	3 ga x3	7	7⅛	5½	8	—	2	¾	20650	—	—	6650	6650
CB7⅛-7	PSL	3 ga x3	7	7⅛	7	8	—	2	¾	20650	—	—	6650	6650
CB68	6x8	7 ga x3	7	5½	7½	8	—	2	⅝	14350	—	—	4200	4200
CB86	6x8	3 ga x3	7	7½	5½	8	—	2	¾	20650	—	—	6650	6650
CB7	GLULAM	3 ga x3	7	6⅞	SPEC	8	—	2	¾	20650	—	—	6650	6650
CB88	8x8	3 ga x3	7	7½	7½	8	—	2	¾	20650	—	—	6650	6650
CB9	GLULAM	3 ga x3	7	8⅞	SPEC	8	—	2	¾	20650	—	—	6650	6650
CB1010	10x10	3 ga x3	3	9½	9½	8	—	2	¾	20650	—	—	6650	6650
CB1012	10x12	3 ga x3	3	9½	11½	8	—	2	¾	20650	—	—	6650	6650
CB1212	12x12	3 ga x3	3	11½	11½	8	—	2	¾	20650	—	—	6650	6650

CB44 (CB46, CB66 similar)

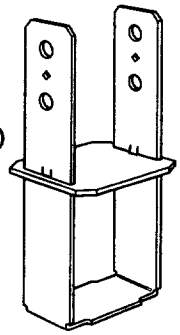

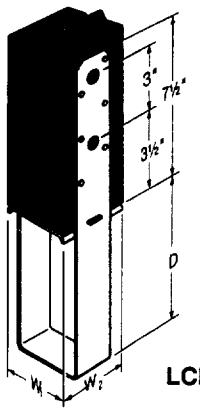

LCB

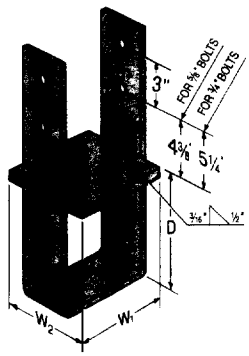

Configuration of all other CB sizes

1. Uplift loads have been increased 33% and 60% for earthquake or wind loading, with no further increase allowed.
2. PSL is parallel strand lumber.
3. When ordering Glulam sizes, specify W_2.

DR. & MARGARET WHITSETT RESIDENCE
5211 FREDRICKSBURG
SACRAMENTO, CA 95835
Res. 419-2130 Cell

2x6 ledger screwed to headers with 3/8 x5" galv. lags/washers
2x6 ledger/stucco + screw holes filled with 30 yr caulk.
2x6 rafters to 2x6 ledger = Simpson LU26

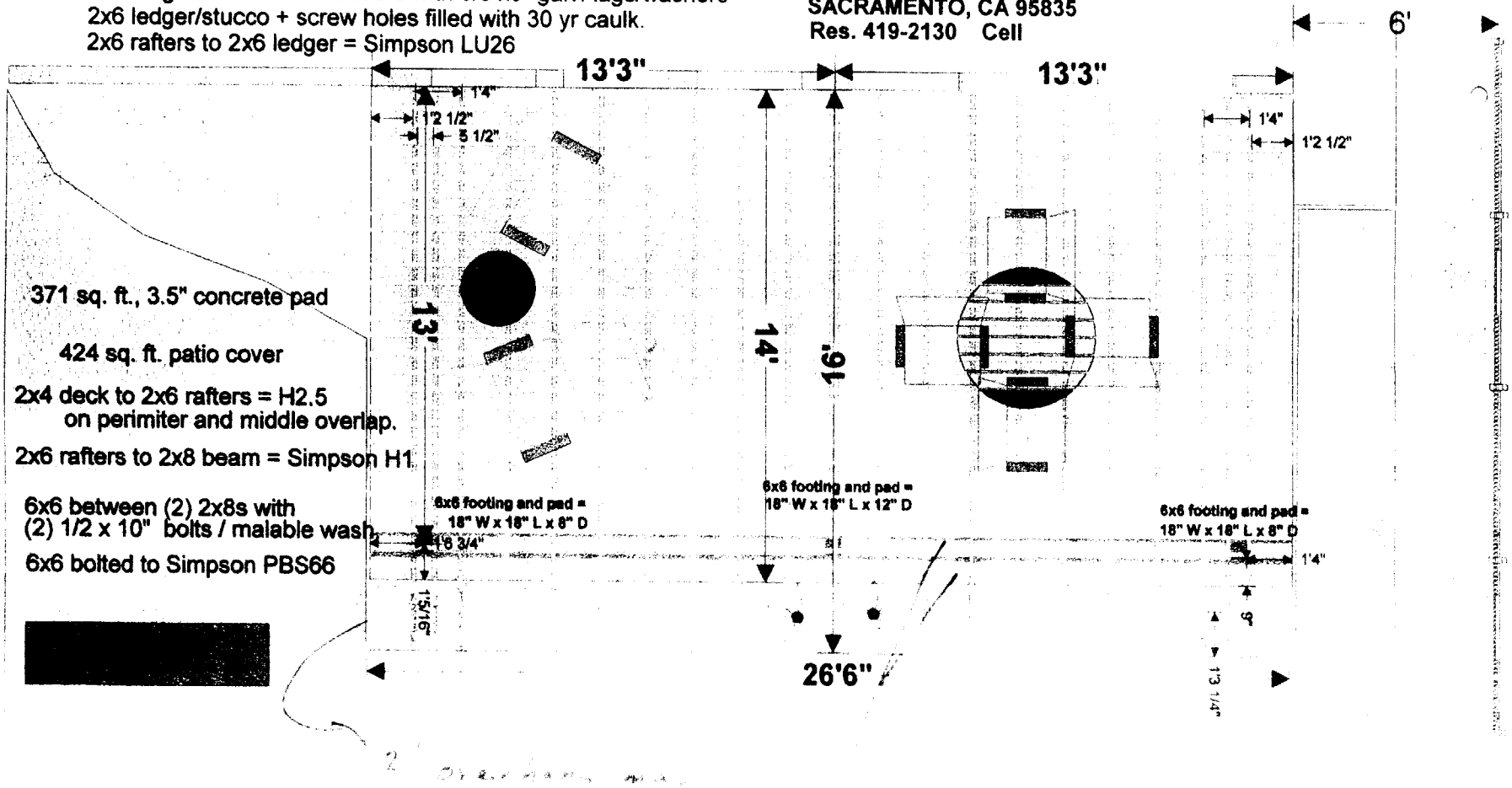

371 sq. ft., 3.5" concrete pad

424 sq. ft. patio cover

2x4 deck to 2x6 rafters = H2.5
on perimiter and middle overlap.

2x6 rafters to 2x8 beam = Simpson H1

6x6 between (2) 2x8s with
(2) 1/2 x 10" bolts / malable wash

6x6 bolted to Simpson PBS66

[redacted]

DR. & MARGARET WHITSETT RESIDENCE
5211 FREDRICKSBURG
SACRAMENTO, CA 95835
Res. 419-2130 Cell

PATIO SHADE ADDITION

PIDWERBECKIS' RENOVATIONS #775348

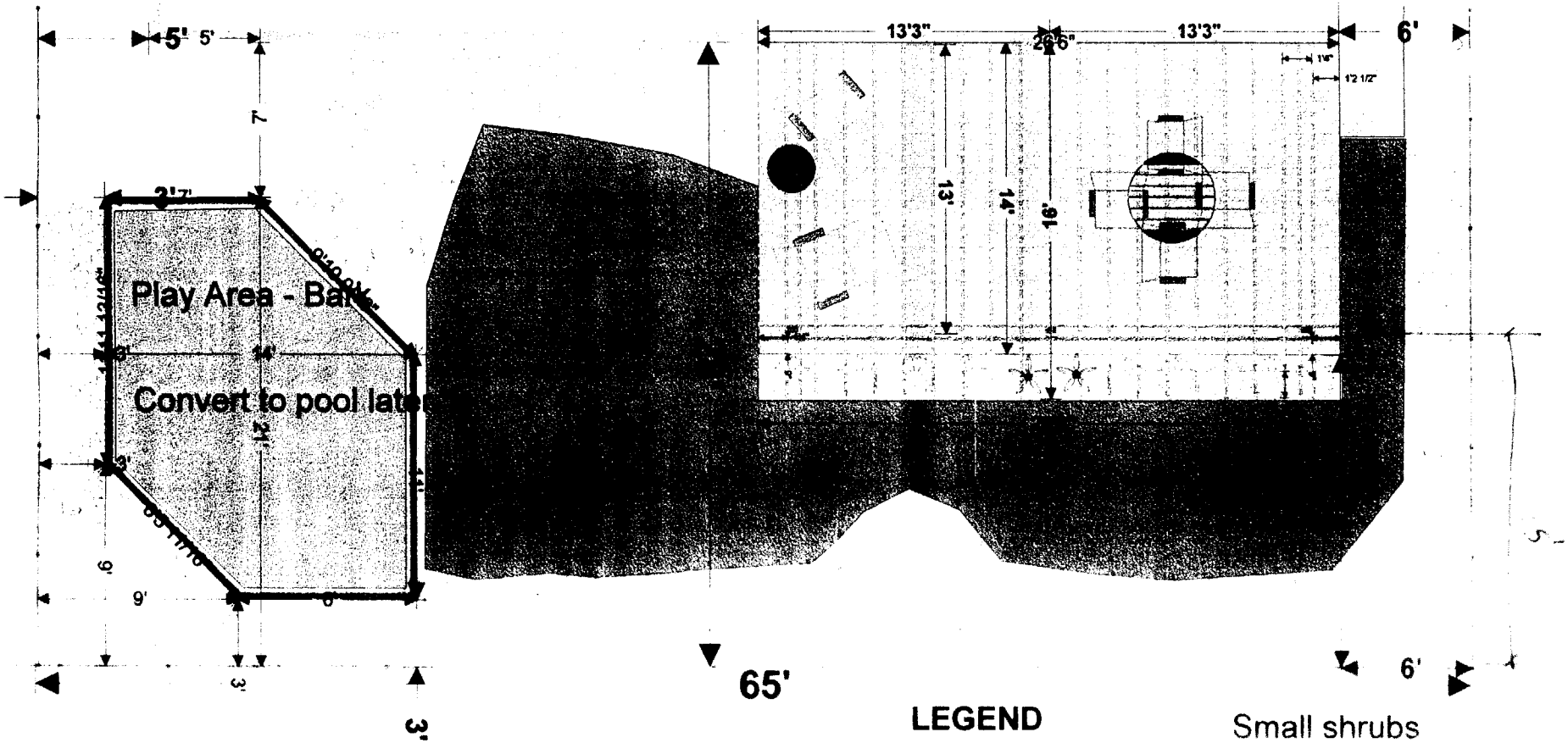

LEGEND

Magnolia or Citrus trees

Small shrubs

Large Shrubs

King & Queen Palms

PATIO SHADE ADDITION

DR. & MARGARET WHITSETT RESIDENCE
5211 FREDRICKSBURG
SACRAMENTO, CA 95835
Res. 419-2130 Cell

MONOLITHIC POUR - PAD&FOOTING
WET-SET PBS66 POST BASE

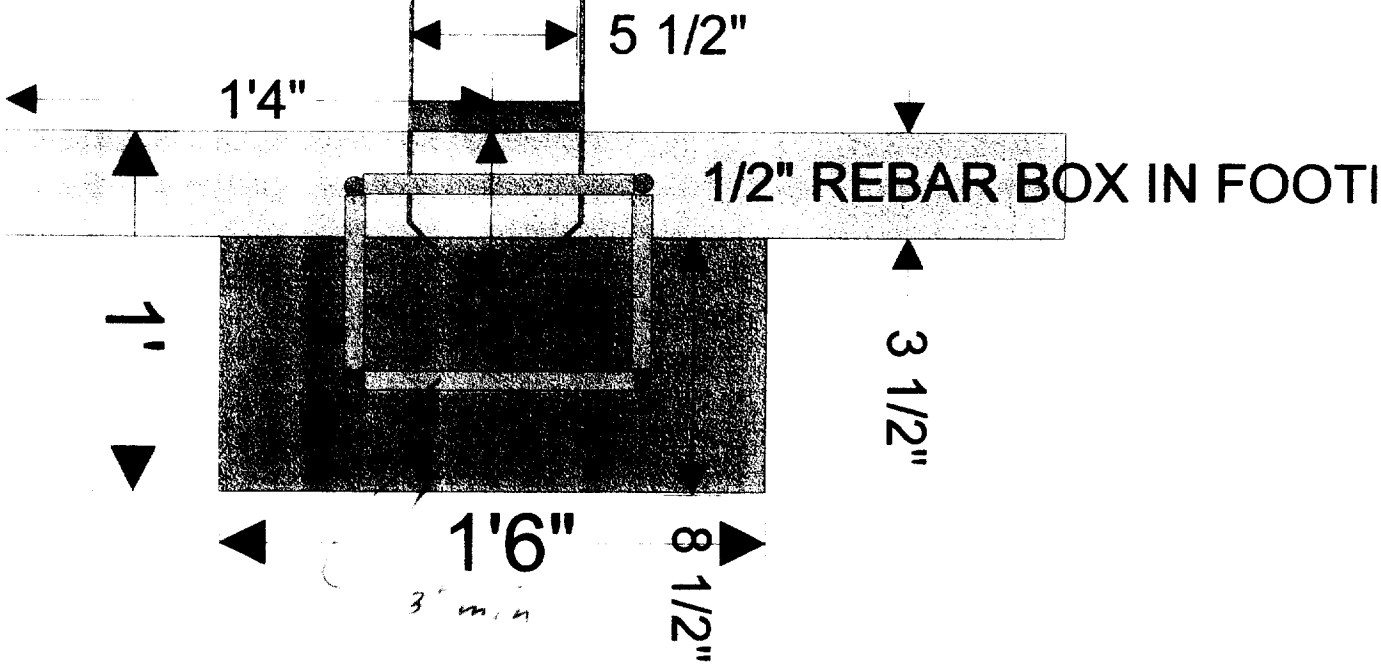

CENTER FOOTIING DETAIL ELEVATION

DR. & MARGARET WHITSETT RESIDENCE

5211 FREDRICKSBURG
SACRAMENTO, CA 95835

Res. 419-2130 Cell

2x6 ledger screwed to headers with 3/8 x5" galv. lags/washers staggered 16" O.C.
2x6 rafters to 2x6 ledger = Simpson LU26 and #10 galv. hanger nails.
2x6 ledger/stucco + screw holes filled with 30 yr caulk.

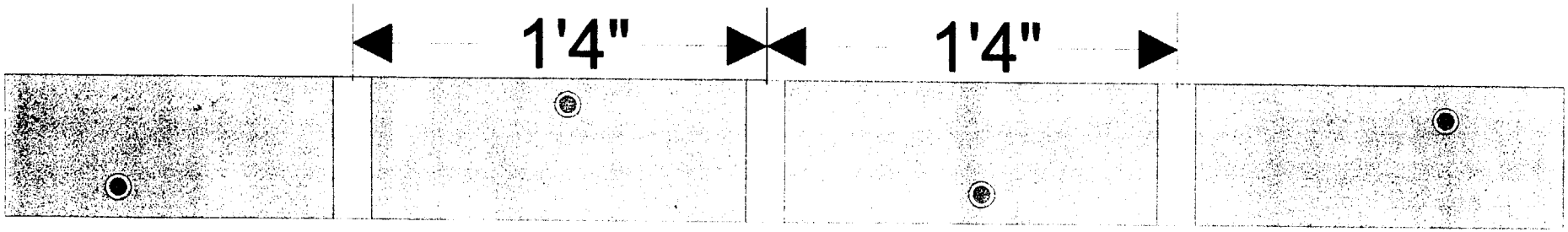

LEDGER DETAIL ELEVATION

PATIO SHADE ADDITION

PIDWERBECKIS' RENOVATIONS #775348

6x6 footing and pad = 18" W x 18" L x 8" D

wash.

6