OFFICE COPY THIS IS A 2 PART FORM
WRITE ON A FIRM SURFACE

CONSTRUCTION LENDING AGENCY

I hereby affirm under penalty of perjury that there is a construction lending agency for the performance of the work for which this permit is issued (Sec. 3097, Civ.C).

Lenders Name —

Lenders Address —

LICENSED CONTRACTORS DECLARATION

I hereby affirm under penalty of perjury that I am licensed under provisions of Chapter 9 (commencing with Section 7000) of Division 3 of the Business and Professions Code and my license is in full force and effect.

License Class C45 Lic. Number 545167

Date 5-27-98 Contractor Monte Hall
(Signature)

OWNER - BUILDER DECLARATION

I hereby affirm under penalty of perjury that I am exempt from the Contractors License Law for the following reason (Sec. 7031.5, Business and Professions Code: Any city or county which requires a permit to construct, alter, improve, demolish, or repair any structure, prior to its issuance, also requires the applicant for such permit to file a signed statement that he or she is licensed pursuant to the provisions of the Contractors License Law (Chapter 9 (commencing with Section 7000) of Division 8 of the Business and Professions Code) or that he or she is exempt therefrom and the basis for the alleged exemption. Any violation of Section 7031.5 by any applicant for a permit subjects the applicant to a civil penalty of not more than five hundred dollars ($500.00).

☐ I, as owner of the property, or my employees with wages as their sole compensation, will do the work, and the structure is not intended or offered for sale (Sec. 7044, Business and Professions Code: The Contractors License Law does not apply to an owner of property who builds or improves thereon, and who does such work himself or herself or through his or her own employees, provided that such improvements are not intended or offered for sale. If, however, the building or improvement is sold within one year of completion, the owner-builder will have the burden of proving that he or she did not build or improve for the purpose of sale).

☐ I as owner of the property am exclusively contracting with licensed contractors to construct the project (Sec. 7044, Business and Professions Code: The Contractors License Law does not apply to an owner of property who builds or improves thereon, and who contracts for such projects with a contractor(s) licensed pursuant to the Contractors License Law).

☐ I am exempt under Sec. ..... B & P C for this reason .....

Date ..... Owner .....
(Signature)

In issuing this building permit, the applicant represents and the City relies on the representation of the applicant that the applicant verified all measurements and locations shown on the application or accompanying drawings and that the improvement to be constructed does not violate any law or private agreement relating to permissible or prohibited locations for such improvements. This building permit does not authorize any illegal location of any improvement or the violation of any private agreement relating to location of improvements.

I certify that I have read the application and state that all the information contained herein is correct. I agree to comply with all city and county ordinances and state laws relating to building construction, and hereby authorize representative of this city to enter upon the above mentioned property for inspection purposes.

5-27-98 Monte Hall
Date Signature of Applicant or Agent

Rest of Plan on microfilm

USE BLACK INK BALL POINT PEN — PRESS FIRMLY

SIGN PERMIT APPLICATION

264-7559

SITE ADDRESS 3651 TRUXEL RD. Natomas Marketplace | SUITE Truxel Rd. Sac. | INSP. AREA

ASSESSOR PARCEL NO. 225-1040-014 | **PERMIT NO.** ____

NAME OF APPLICANT	ADDRESS	ZIP CODE	PHONE NO.
LICENSED CONTRACTOR Ellis-Ellis Sign	1111 Delta Way Sac. 9	95815	924-1936
BUSINESS OWNER Jan Paterson			714/854-2100

SIGN INFORMATION

☐ ATTACHED ☐ INTERIOR / ELECT. ☐ SINGLE FACED
☐ ILLUMINATED ☐ NON-ILLUMINATED ☐ BILLBOARD / SUBDIVISION
☐ INDIVIDUAL LETTERS ☐ PAINTED ON BUILDING ☐ LOGO
☐ METAL ☐ POLE ☐ DOUBLE FACED
☐ PLASTIC ☐ MONUMENT ☐ VINYL/GATOR FOAM
☐ WOODEN ☐ PROJECTING ☐ RE-FACE

SIGN COPY Sign Type 'B1'

3 DIRECTIONAL SIGNS 54#

(A) HEIGHT 12'-0" (B) LENGTH ____
(A X B) SIGN AREA 30 18# EACH
POLE SIZE ____ FOOTING SIZE ____
STREET FRONTAGE (FT) ____
OCCUPANCY FRONTAGE (FT) ____

OFFICE USE ONLY

ENGINEERING REQUIRED? YES NO APPROVED BY ____
DESIGN REVIEW REQUIRED? YES NO APPROVED BY ____
SPECIAL PERMIT REQUIRED? YES NO P# ____
VARIANCE REQUIRED YES NO P# ____
LOCATED IN PUD YES NO WHICH PUD ____

SIGN VALUATION

EXPIRE IF SIGN ....
BY ..... SQ. FT. ....
COMPLETED BY ..... DATE ....
COMMENTS ..... TOTAL ....

FINAL INSPECTIONS

BUILDING INSPECTOR DRP DATE 8-4-00
ELECTRICAL INSPECTOR KLH DATE 8-3-00
SIGN INSPECTOR ..... DATE ....

FEES	RECEIVED DATE	AMOUNT
SIGN APPLICATION FEE	5-29-98	285
SIGN PERMIT FEE		
ELECTRICAL SIGN FEE		
CITY BUSINESS LICENSE		84
OTHER FEES		

PAID CITY OF SACRAMENTO 3804694/961 JUN 05 1998

TOTAL FEES $

CITY OF SACRAMENTO BUILDING INSPECTION DIVISION

PERMIT SERVICES 264-7619

WORKER'S COMPENSATION DECLARATION

I hereby affirm under penalty of perjury one of the following declarations:

☐ I have and will maintain a certificate of consent to self-insure for workers' compensation as provided for by Section 3700 of the Labor Code, for the performance of work for which the permit is issued.

☐ I have and will maintain workers' compensation insurance as required by Section 3700 of the Labor Code, for the performance of the work for which this permit is issued. My workers' compensation insurance carrier and policy number are:

Carrier John O. Brown Co.

Policy Number WC0277034

☐ (This section need not be completed if the permit is for one hundred dollars ($100) or less.) I certify that in the performance of the work for which this permit is issued, I shall not employ any person in any manner so as to become subject to the workers' compensation laws of California and agree that if I should become subject to the workers' compensation provisions of Section 3700 of the Labor Code, I shall forthwith comply with those provisions.

Date 5-27-98 Applicant Monte Hall
(Signature)

THIS PERMIT SHALL EXPIRE BY LIMITATION IF WORK AUTHORIZED IS NOT COMMENCED WITHIN 180 DAYS.

NATOMAS MARKETPLACE

BY RWM DATE 5/98 SUBJECT PEDESTRIAN DIRECTIONALS SHEET NO. 1 OF 1

CHKD. BY DATE TRUXELL RD @ HWY I 80 JOB NO. 98-143B

ELLIS & ELLIS

P.O. # 7940

DESIGN CRITERIA

CODE - 1994 UBC

WIND - 75 M.P.H, EXP. 'C'

WIND ON SIGN

$p = C_e C_q q_s I = (1.06)(1.4)(14.5)1 = 21.5$ P.S.F.

Ⓐ $(6.5' \times 1.25/2)\ 21.5^{\#/\square'} = 87 \times 11.83 = 1029$

Ⓑ $(4' \times .5)\ 6 \times 21.5 = 258 \times 9.07 = 2340$

Ⓒ $(\frac{4.5}{12} \times 8)\ 21.5 = 65 \times 7.0 = 455$

Ⓓ $(1.0 \times 3)\ 21.5 = 65 \times 1.5 = 98$

$\Sigma P = 475^{\#}$ $\Sigma M = 3922$

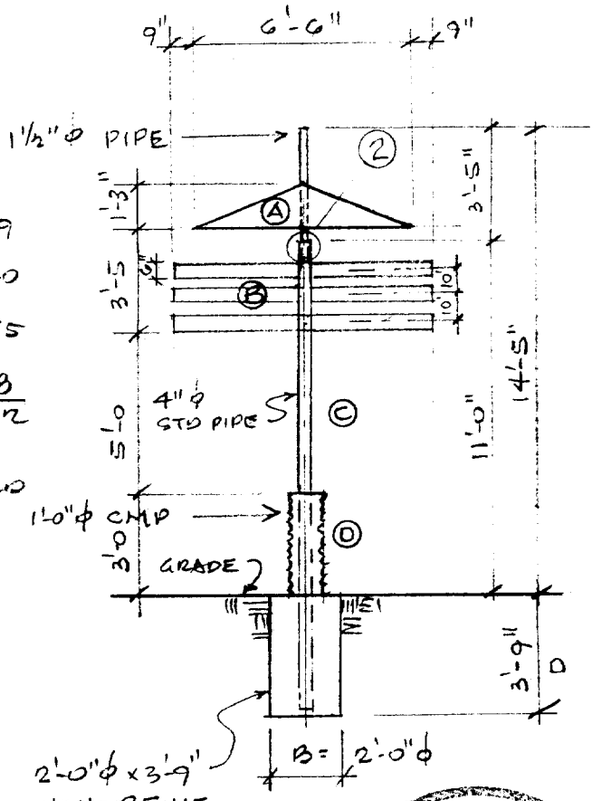

FOOTING EMBEDMENT NON-CONSTRAINED

H.P. CALCULATOR PROGRAM 03C360

$D_2 = \left(\frac{7.02P}{2WBD_1}\right)\left[1 + \left(1 + \frac{.621\,WBD_1H}{P}\right)^{1/2}\right]$ UBC 1806.7.2.1

TRY 2'-0"φ CONC PIER = B

$H = \frac{3922}{475} = 8.26'$; $P = 475^{\#}$

$W = 150\,(2)(1.33) = 400$ P.S.F. / FT² ALLOW.

$D = 3.76'$

USE 2'-0"φ x 3'-9" CONC PIER NO REINF. REQ'D $f'_c = 2000$ PSI

* ALTERNATE: 2'-0 x 2'-0 x 3'-4" CONC. PIER

BASE WIND COLUMN

TRY 4"φ PIPE O.D. = 4½"

$f_b = \frac{3922 \times 12}{3.21''^3} = 14{,}662$ PSI

$F_b = .6\,(36000)\,1.33 = 28{,}728$ PSI

USE 4"φ STD. PIPE ASTM A53 GrB t = .237 WT. = 10.79#/'

COLUMN TRANSITION @ 11'-0" ABV. GR.

$M_A = 87 \times .83' = 72'^{\#}$

$f_b = \frac{72 \times 12}{.326''^3} = 2658$ PSI

USE 1½"φ STD. PIPE ASTM A53 GrB t = .145" WT = 2.72#/'

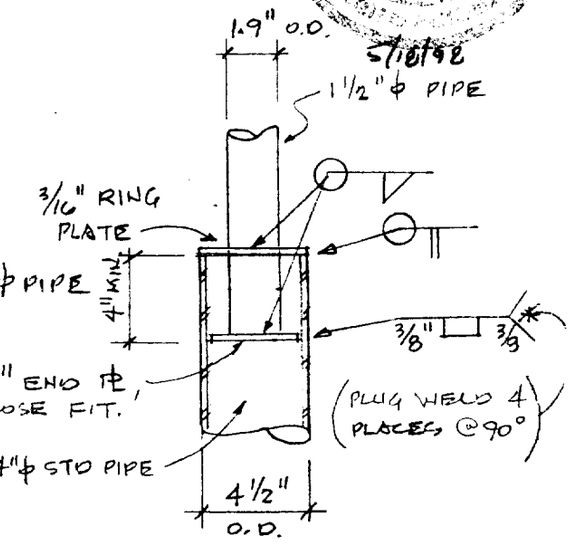

DETAIL ②

B2 Sign Type Location

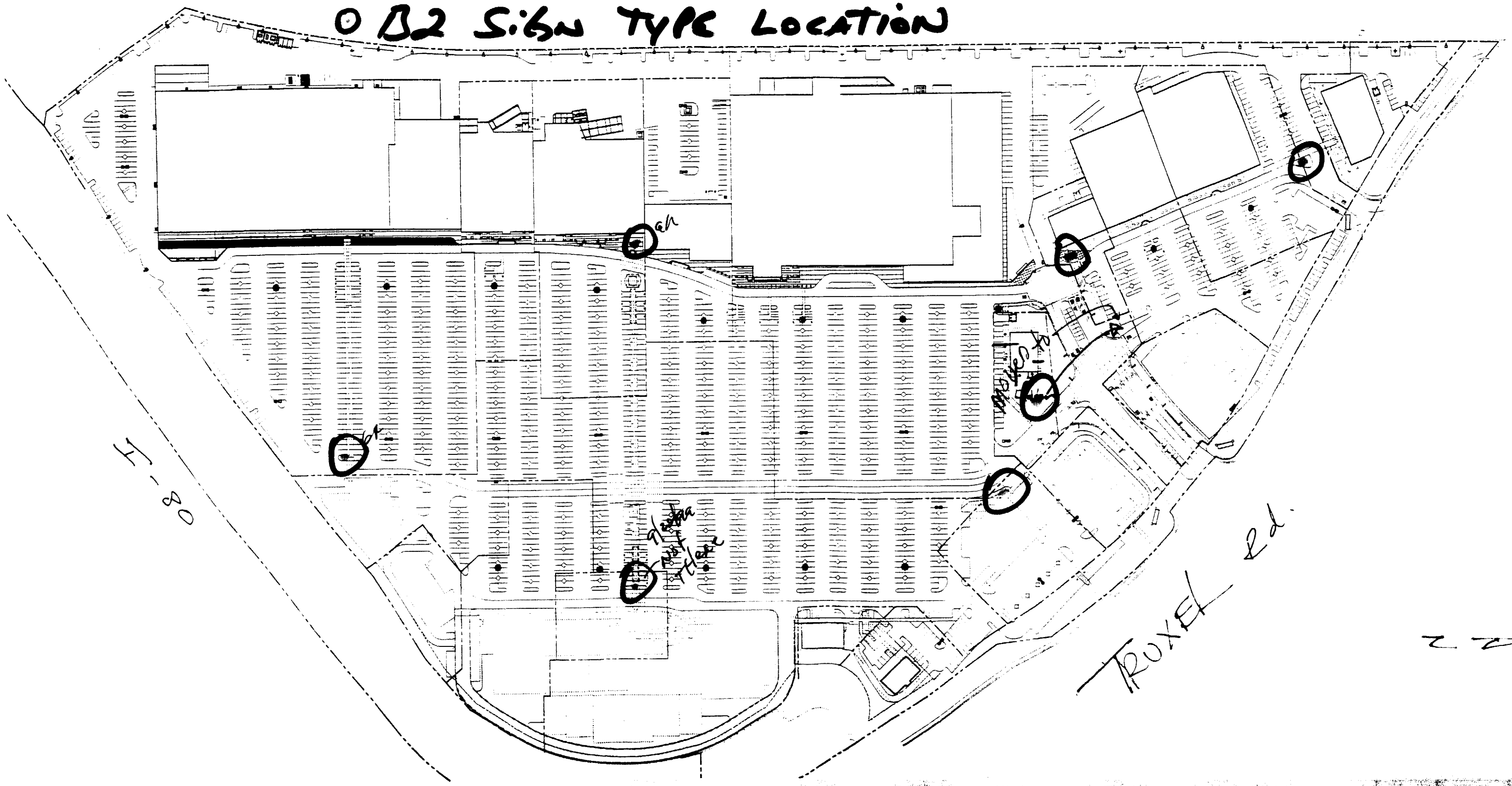

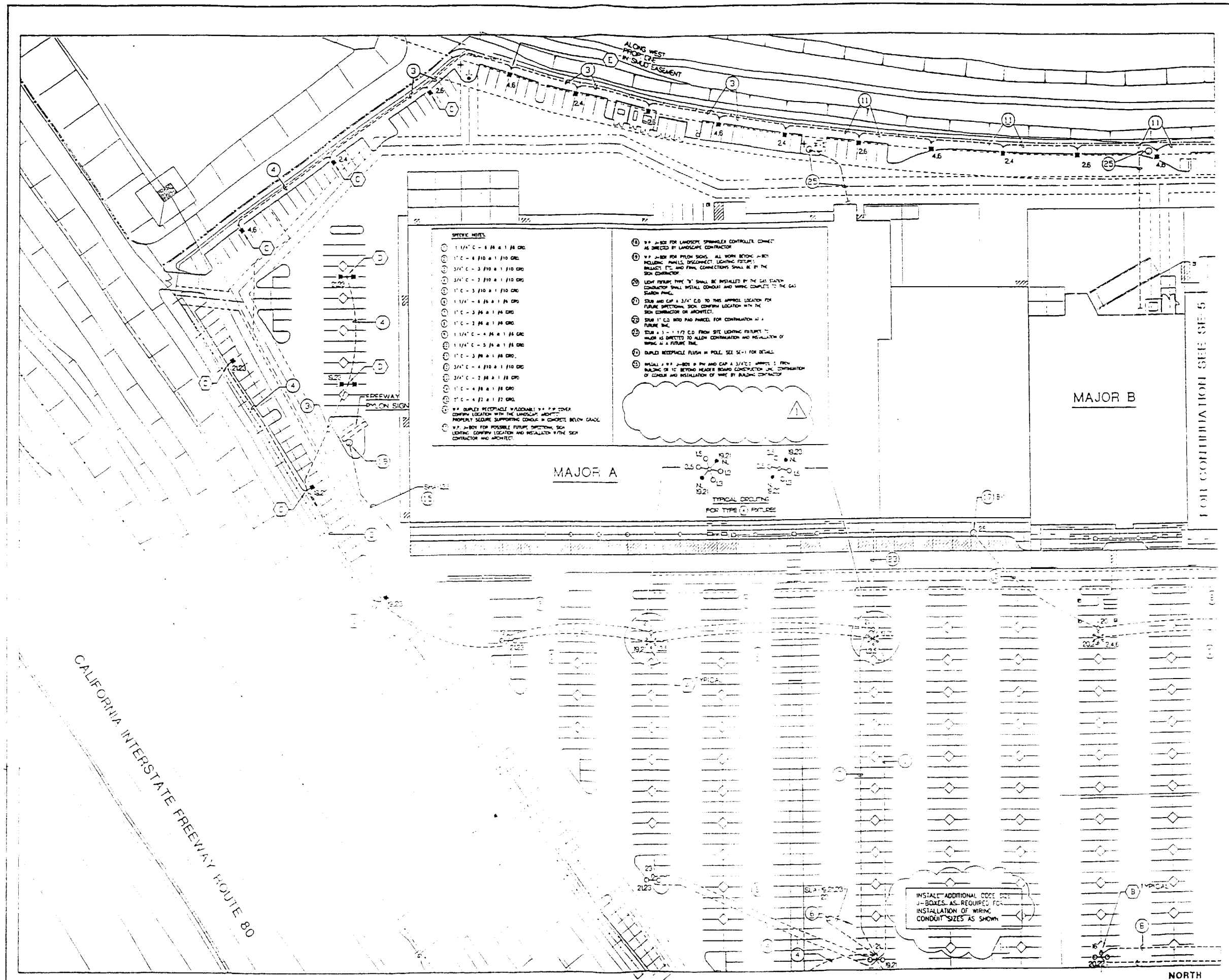

MORTON & PITALO, INC.
CIVIL ENGINEERING • PLANNING • SURVEYING

CONSULTANT

HALLIS ENGINEERING INCORPORATED
CONSULTING ELECTRICAL ENGINEERS

APPROVALS

NO.	DATE	DESCRIPTION
1	4-22-97	ADDENDUM

REVISIONS

BENCH MARK

COMPUTED BY: THE E.C.A.D. STAFF
DESIGNED BY: J.P.
DRAWN BY: THE E.C.A.D. STAFF
PROJECT ENGINEER

PROJECT: Sign Type B2 Directionals

DRAWING: LIGHTING PLAN SECTION #1

DATE: 11-19-97
SCALE: AS NOTED
JOB NUMBER:
SHEET: SE-4
OF

NATOMAS MARKETPLACE

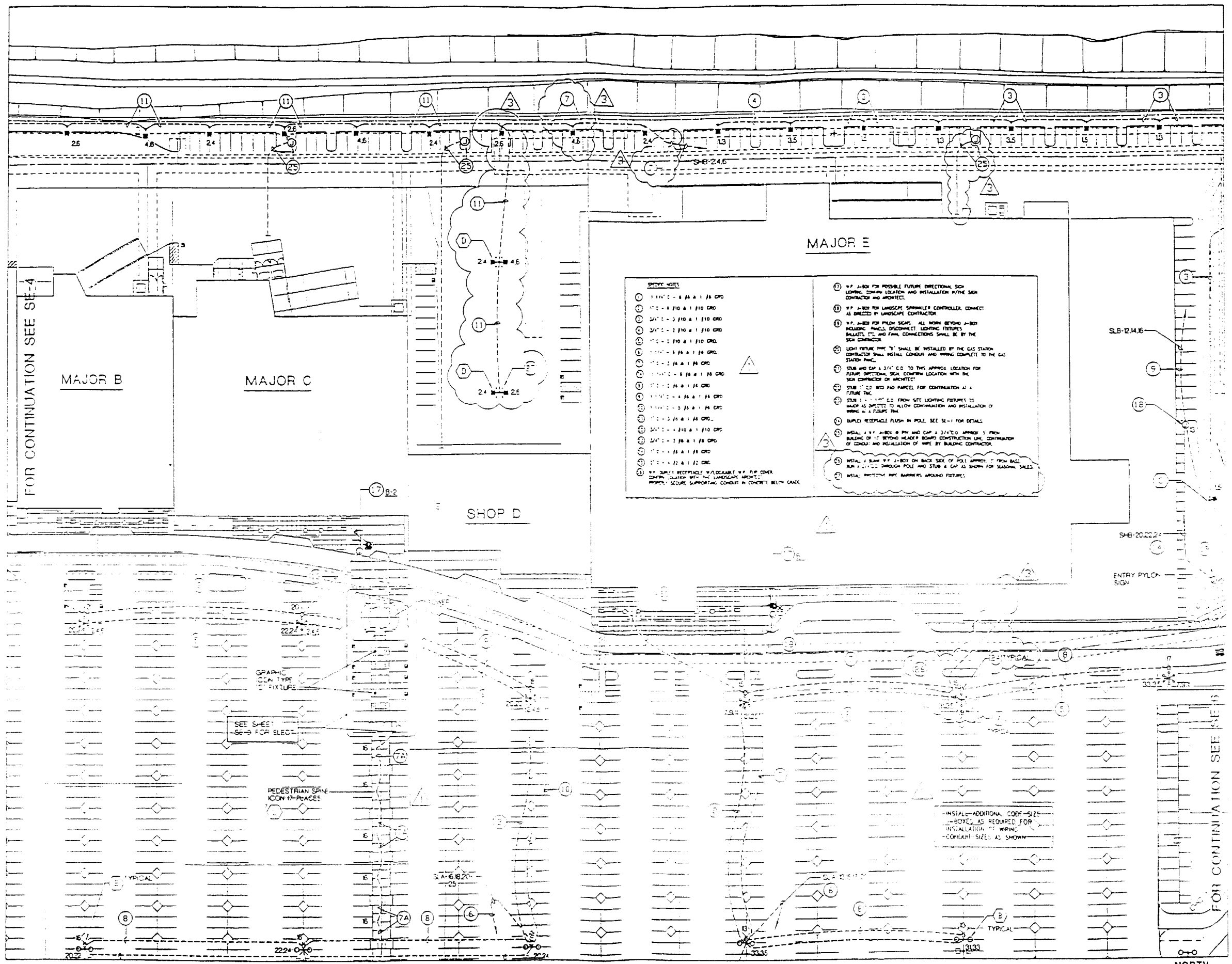

MORTON & PITALO, INC.
CIVIL ENGINEERING • PLANNING • SURVEYING

CONSULTANT

HALLS ENGINEERING INCORPORATED
CONSULTING ELECTRICAL ENGINEERS
348 WILMAR BLVD. SUITE 20
LOS MOLINOS, CA 96055
70-100-0.0

APPROVALS

NATIONAL MARKETPLACE

REVISIONS

NO.	DATE	DESCRIPTION
1		SHEET ADDENDUM
2		SHEET ADDENDUM

BLACK MAT

COMPUTED BY: THE EGAD STAFF
DESIGNED BY: J.P.
DRAWN BY: THE EGAD STAFF
PROJECT ENGINEER

PROJECT: Sign Type B2 Directional

DRAWING: LIGHTING PLAN SECTION #2

DATE: 11-12-97
SCALE: AS NOTED
JOB NUMBER:
SHEET: SE-5
OF

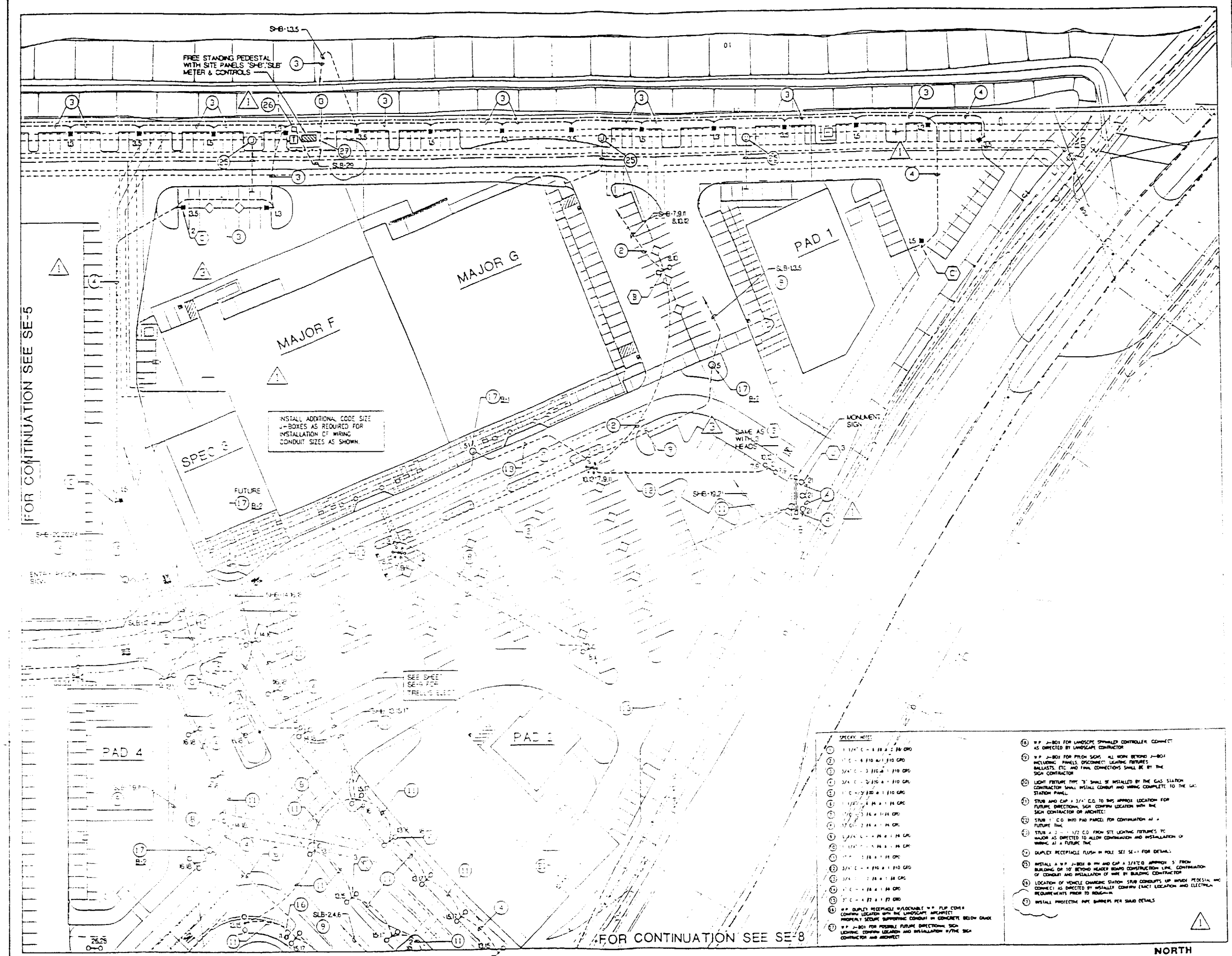

SPECIAL NOTES

1. 1 1/4" C - 4 #8 & 1 #6 GRD
2. 1" C - 4 #10 & 1 #10 GRD
3. 3/4" C - 3 #10 & 1 #10 GRD
4. 3/4" C - 2 #10 & 1 #10 GRD
5. 1" C - 3 #10 & 1 #10 GRD
6. 1 1/2" C - 4 #4 & 1 #6 GRD
7. 1 1/2" C - 3 #4 & 1 #4 GRD
8. 1 1/2" C - 4 #4 & 1 #4 GRD
9. 1 1/2" C - 4 #4 & 1 #4 GRD
10. 1 1/2" C - 4 #4 & 1 #4 GRD
11. 1" C - 2 #4 & 1 #4 GRD
12. 3/4" C - 4 #10 & 1 #10 GRD
13. 3/4" C - 2 #8 & 1 #8 GRD
14. 1" C - 4 #8 & 1 #8 GRD
15. 1" C - 4 #12 & 1 #12 GRD
16. W.P. DUPLEX RECEPTACLE W/LOCKABLE W.P. FLIP COVER CONFIRM LOCATION WITH THE LANDSCAPE ARCHITECT PROPERLY SECURE SUPPORTING CONDUIT IN CONCRETE BELOW GRADE
17. W.P. J-BOX FOR POSSIBLE FUTURE DIRECTIONAL SIGN LIGHTING. CONFIRM LOCATION AND INSTALLATION W/THE SIGN CONTRACTOR AND ARCHITECT
18. W.P. J-BOX FOR LANDSCAPE SPRINKLER CONTROLLER. CONNECT AS DIRECTED BY LANDSCAPE CONTRACTOR
19. W.P. J-BOX FOR PYLON SIGNS. ALL WORK BEYOND J-BOX INCLUDING PANELS, DISCONNECT, LIGHTING FIXTURES BALLASTS, ETC. AND FINAL CONNECTIONS SHALL BE BY THE SIGN CONTRACTOR
20. LIGHT FIXTURE TYPE "B" SHALL BE INSTALLED BY THE GAS STATION CONTRACTOR. SHALL INSTALL CONDUIT AND WIRING COMPLETE TO THE GAS STATION PANEL.
21. STUB AND CAP A 3/4" C.O. TO THIS APPROX LOCATION FOR FUTURE DIRECTIONAL SIGN. CONFIRM LOCATION WITH THE SIGN CONTRACTOR OR ARCHITECT
22. STUB 1" C.O. INTO PAD PARCEL FOR CONTINUATION AT A FUTURE TIME
23. STUB A 2 - 1 1/2" C.O. FROM SITE LIGHTING FIXTURES TO MAJOR AS DIRECTED TO ALLOW CONTINUATION AND INSTALLATION OF WIRING AT A FUTURE TIME
24. DUPLEX RECEPTACLE FLUSH IN POLE. SEE SE-1 FOR DETAILS
25. INSTALL A W.P. J-BOX @ PIN AND CAP A 3/4" C.O. APPROX 5' FROM BUILDING OR 10' BEYOND HEADER BOARD CONSTRUCTION LINE. CONTINUATION OF CONDUIT AND INSTALLATION OF WIRE BY BUILDING CONTRACTOR
26. LOCATION OF VEHICLE CHARGING STATION. STUB CONDUITS UP INSIDE PEDESTAL AND CONNECT AS DIRECTED BY INSTALLER. CONFIRM EXACT LOCATION AND ELECTRICAL REQUIREMENTS PRIOR TO ROUGH-IN.
27. INSTALL PROTECTIVE PIPE BARRIER PER SHADD DETAILS

MORTON & PITALO, INC.
CIVIL ENGINEERING • PLANNING • SURVEYING

CONSULTANT

HALLIS ENGINEERING INCORPORATED

APPROVALS

REVISIONS

NO	DATE	DESCRIPTION
2	9-29-97	BULLETIN
1	5-14-97	ADDENDUM
0	4-29-97	ADDENDUM

BENCH MARK

COMPUTED BY: THE ECAD STAFF
DESIGNED BY: J.P.
DRAWN BY: THE ECAD STAFF
PROJECT ENGINEER:

PROJECT: Sign Type B2 Directional

DRAWING: LIGHTING PLAN SECTION #3

DATE: 11-20-97
SCALE: AS NOTED
JOB NUMBER:
SHEET: SE-6

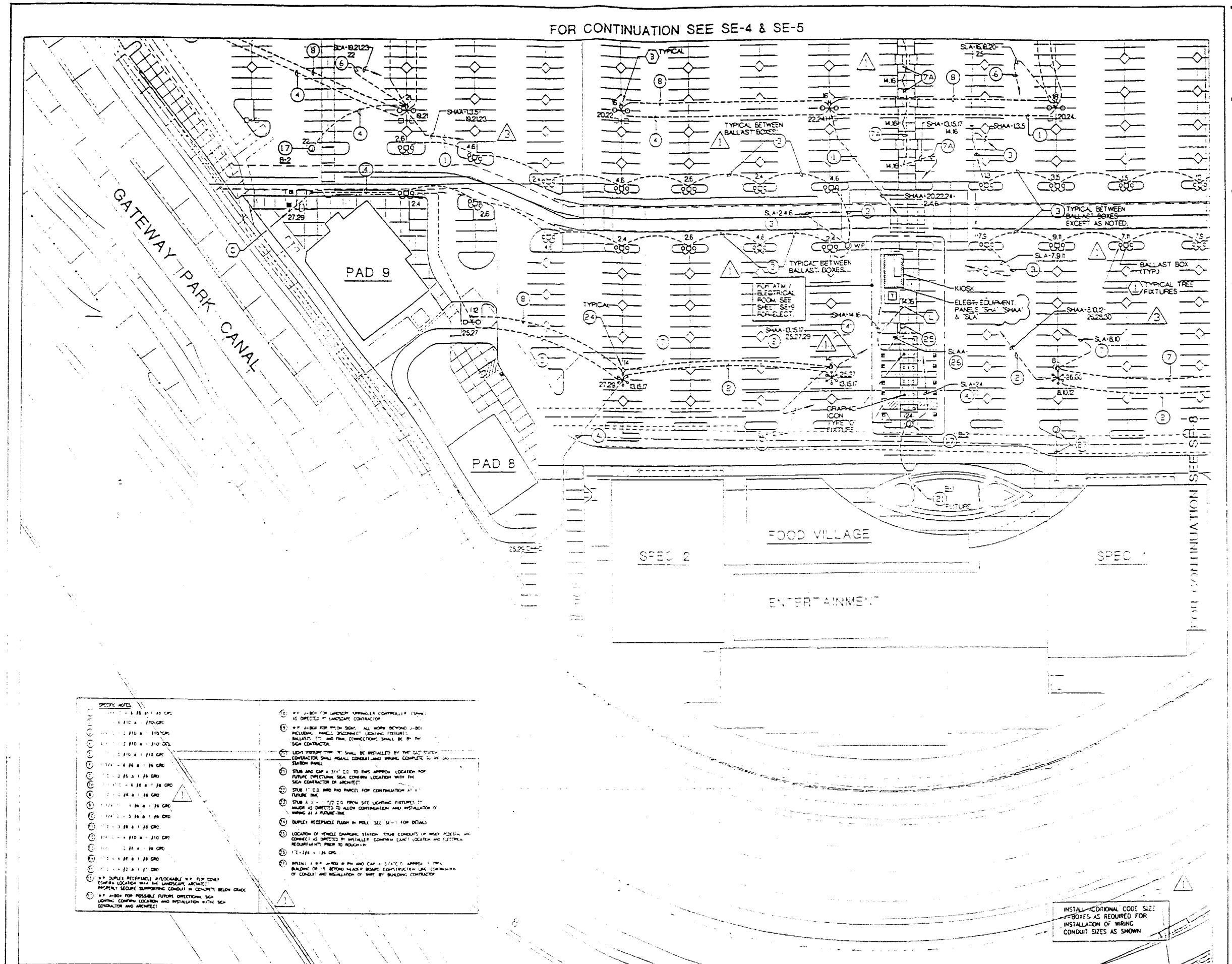

MORTON & PITALO, INC.
CIVIL ENGINEERING • PLANNING • SURVEYING

CONSULTANT

HALLIS ENGINEERING INCORPORATED

APPROVALS

NO	DATE	DESCRIPTION
7A		"BIDDER'S BULLETIN"
7B		"BIDDER'S ADDENDUM"
7C	4-29-97	ADDENDUM

REVISIONS

BENCH MARK

COMPUTED BY: THE EGLAD STAFF
DESIGNED BY: J.P.
DRAWN BY: THE EGLAD STAFF
PROJECT ENGINEER

PROJECT: Sign Type B2 Directional

DRAWING: LIGHTING PLAN SECTION #4

DATE: 11-20-97
SCALE: AS NOTED
JOB NUMBER

SHEET: SE-7
OF

FOR CONSTRUCTION

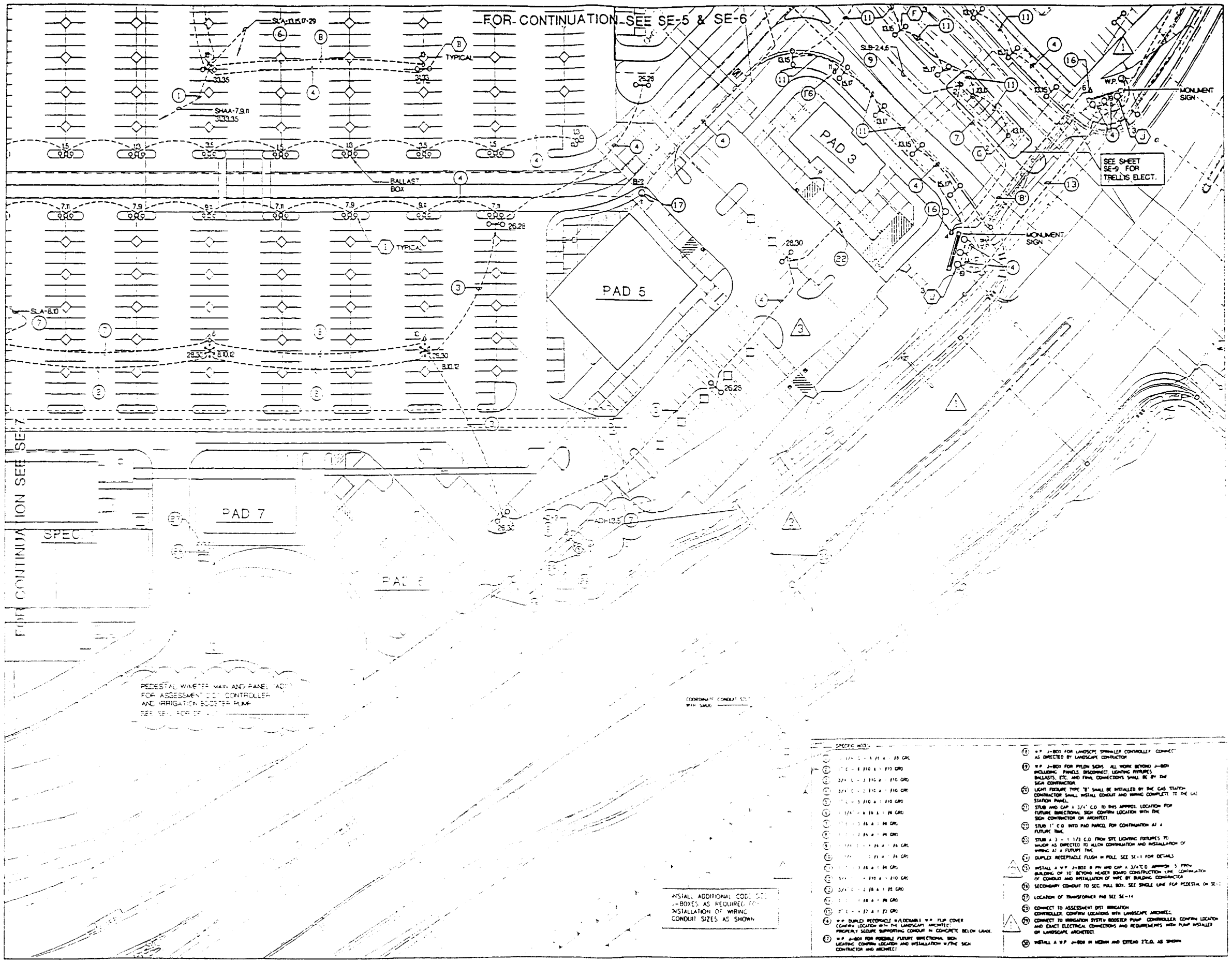

MORTON & PITALO, INC.
CIVIL ENGINEERING • PLANNING • SURVEYING

CONSULTANT

HALLS ENGINEERING INCORPORATED

APPROVALS

MAIN ENTRANCE

NO DATE DESCRIPTION
REVISIONS

BENCH MARK

COMPUTED BY
THE EGAD STAFF
DESIGNED BY
J.P.
DRAWN BY
THE EGAD STAFF
PROJECT ENGINEER

PROJECT
Sign Type B2 Directional

DRAWING
LIGHTING PLAN SECTION #5

DATE
SCALE
AS NOTED
JOB NUMBER

SHEET
SE-8
OF